GEORGE DALE
Commissioner of Insurance
State Fire Marshal

LEE HARRELL
Deputy Commissioner of Insurance

RICKY DAVIS
State Chief Deputy Fire Marshal

LARRY BARR
State Fire Coordinator

STATE OF MISSISSIPPI

DEPARTMENT OF INSURANCE

OFFICE OF THE FIRE MARSHAL

501 N. WEST STREET • 1001 WOOLFOLK BUILDING
JACKSON, MISSISSIPPI 39201
firemarshal@mid. state.ms.us
Website: www.doi.state.ms.us

Post Office Box 79 (39205)
Jackson, Mississippi
State Fire Marshal's Office
(601) 359-1061
1-888-648-0877
Fax: (601) 359-1076
State Fire Coordinator
(601) 359-1062

June 19, 2007

Mr. David J. Barts
Account Manager
NTA, Inc.
305 North Oakland Avenue/P. O. Box 490
Nappanese, Indiana 46550

RE: Cavalier Home Builders
Model# 1458

Dear Mr. Barts:

Eugene Humphrey, Assistant State Chief Fire Marshal, has requested that I contact you concerning the above referenced project dated June 19, 2007.

The State Fire Marshal's Office evaluation of the plans using the *2003* edition of the *International Residential Code* are found to be **in** substantial compliance and are hereby **approved** as submitted.

If you should have any questions or concerns, please do not hesitate to contact our office.

Sincerely,

James Jackson

James Jackson, Deputy State Fire Marshal, I

Cc: Ricky Davis, Chief, Deputy State Fire Marshal

JJ/sh

R:/SHARE/MACKEY06/PLANREVIEW06/DAVIDBARTS.NTA.CAVALIERHOMEBUILDERS.MODEL1458.0607.DOC

RECEIVED
JUN 19 2007
STATE MISS. INSURANCE DEPT
FIRE MARSHAL'S OFFICE

Cavalier Home Builders

32 Wilson Blvd 100, Addison AL 35540
P.O. Box 630, 206 Magnolia St., Millen GA 30442
601 County Rd. 69, Winfield AL 35594

1458

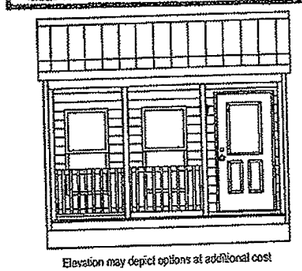

Elevation may depict options at additional cost

Design Codes: (Mississippi)

2003 IBC/IRC, 2005 NEC
MISSISSIPPI MODULAR APPROVAL
FLOOR LIVE LOAD: 40 PSF — TCDL = 7 PSF
FLOOR DEAD LOAD: 10 PSF — BCDL = 7 PSF
GROUND SNOW LOAD: 30 PSF. — BCLL = 10 PSF
WIND LOAD:
A. 150 MPH AT 3 SECOND GUST, EXPOSURE B
HUD = WIND ZONE 3
B. Iw = 1.0 _____WIND IMPORTANCE FACTOR
C. B _____WIND EXPOSURE CATEGORY.
D. GCpi = +/- 0.18 _____INTERNAL PRESSURE COEFFICIENT.
E1. Pw = 54.2 PSF _____(END ZONE) WALL COMPONENT & CLADDING LOAD.
E2. Pw = 43.9 PSF _____(INTERIOR ZONE) WALL COMPONENT & CLADDING LOAD.
F1. Pr = 37.0 PSF _____(INTERIOR ZONE) ROOF COMPONENT & CLADDING LOAD.
F2. Pr = 64.5 PSF _____(END ZONE) ROOF COMPONENT & CLADDING LOAD.
F3. Pr = 95.4 PSF _____(CORNER ZONE) ROOF COMPONENT & CLADDING LOAD.
G1. OVERHANG =75.5 PSF (SIDE ZONE)
G2. OVERHANG = 126.9 PSF (CORNER ZONE)
H. THIS BUILDING IS NOT DESIGNED FOR PLACEMENT ON THE UPPER HALF OF A HILL OR ESCARPMENT EXCEEDING 15 FEET IN HEIGHT.
WALL HEIGHT: 96 1/4" MAX. SEISMIC DESIGN CATEGORY : C

Thermal Design Criteria (Insulation):

R-11 Floors; R-19 Walls; R-30 Min. Roof
(Doors - U=.60 min.; Windows - U=.36 or better)
HUD Thermal zone 1.

Building Site Installation Requirements:

The following items have not been completed by the building manufacturer, have not been inspected by the third party inspection agency, and are not certified by the state modular label and/or certification. Code compliance for these items must be determined at the local level:

1). The completed foundation support system and tie down and/or anchorage system.
2). Electrical service hookup (including any feeders or service wires/cables, or the Service Panel if not installed in factory).
3). Building drains, cleanouts, and hookups to plumbing system, or a portion thereof, and any/and/or all finish plumbing.
4). Ramps, stairs, and general means of access to the building.
5). Install R-6.5 insulation on all piping installed in unconditioned spaces.
6). HVAC system crossover ducts and/or entire HVAC systems or a portion thereof. (including but not limited to: below floor ducting, external heat pumps, A/C units, etc.)
7). Crawl space or basement light and switch.

APPROVED
BY
STATE FIRE MARSHAL'S OFFICE
STATE OF MISSISSIPPI
DATE: 6/19/07

Drawing Description Index	Page #:	Drawing Description Index	Page #:
Typical Elevations	1.A, 1.B	Porch Section and Details	17.A, 17.B
Floor Plan	2.A	Hip Porch Section	17.C
Floor Plan - UFAS	2.B	Metal Roof Details	18.A,18.B
Cross Section Details	3.A, 3.B	Porch Framing Details	19
Carrier Frame	4	Water Supply	20
Carrier Details	5	DWV System	21
Off-Frame Foundation Plans	6.A, 6.B	Electrical Plan	22.A
On-Frame Foundation Plans	7.A, 7.B, 7.C	Electrical Load Calc	22.B
Floor Framing	8	HVAC System	23.A
Floor Decking	9	Manual J	23.B
Left Sidewall	10	Manual D	23.C
Right Sidewall	11	Energy Compliance (Rescheck)	23.D
Sidewall Details	12	Connection Details	24.A, 24.B
Shearwalls	13.A, 13.B, 13.C	Cabinet Details	25
Ship Loose Window Protectors	14	Cabinet Details	26
Roof Framing	15	Trusses	27
Roof Framing Elev. B	16	Calculation	28

P.E. Seal

NADER TOMASBI
REGISTERED PROFESSIONAL ENGINEER
16679
06/19/2007
STATE OF MISSISSIPPI

3rd Party Stamp

APPROVED BY
JUN 19 2007
NTA INC

Additional Notes:

Typical foundation details provided w/ this drawing set. The design criteria herein is for this system only as shown. For other design deviations or special site requirements, consult a licensed Professional Engineer locally. If the foundation plans are designed by others, the designer of the building plans shall not be held responsible or liable for the foundation design and the consequential performance of the superstructure's structural components and systems related thereto.
Areas within hurricane prone regions within one mile of the coastal mean high water line w/ wind speed of 110 or greater or a basic wind speed of 120 mph or greater must have window protection installed on-site by others. Window protection must meet the requirements of the code and the "Large Missile Test".
Manufacturer's installation instructions shall be available on the job site at the time of inspection.
Design criteria for basic wind speeds equal or exceeding 110 mph per ASCE 7-02 in accordance with Section R301.2.1.1.
STRUCTURE NOT TO BE LOCATED IN FLOOD PLANE AREAS UNLESS A LOCAL P.E. DESIGNS FOUNDATION FOR SUCH AREAS.

dti ◆design◆tech◆inc◆

Disclaimer: These drawings have been prepared and reviewed in accordance with all applicable codes. This drawing set is not intended to be all inclusive, nor does this set detail every code required aspect of this building. Compliance with all applicable codes per local authority having jurisdiction whether detailed in this set or not must be met. This document is developed based on information provided by State of Mississippi Emergency Management Agency (project # STMS012507).

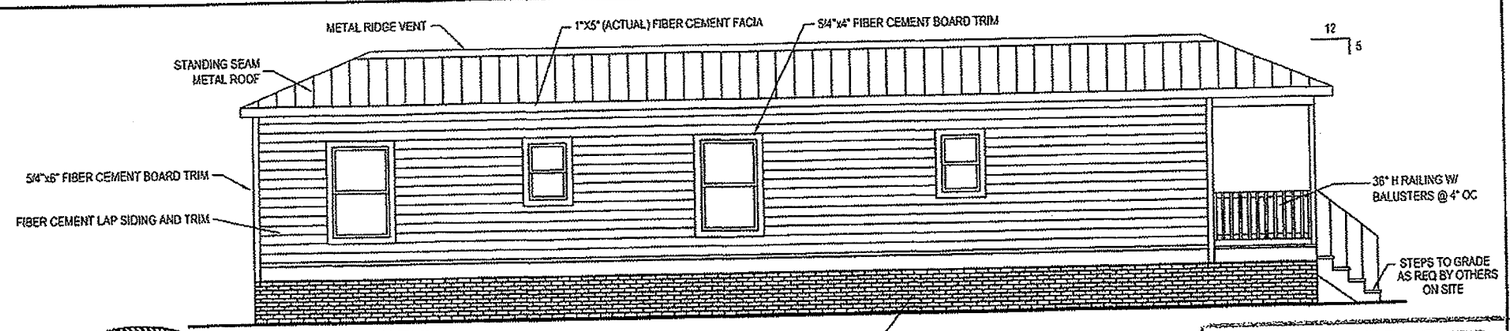

FRONT ELEVATION

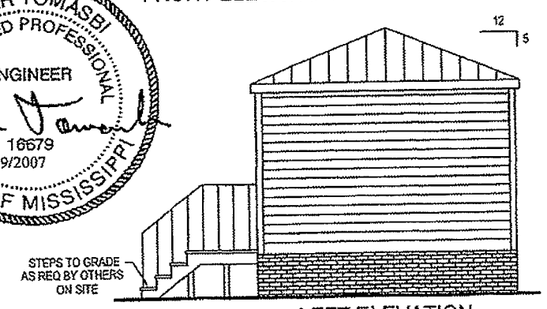

LEFT ELEVATION

ATTIC VENTILATION REQUIRED: 2.8 sq. ft.

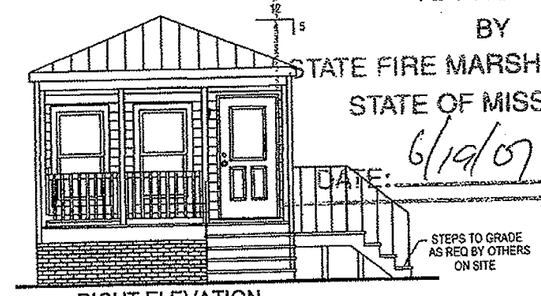

RIGHT ELEVATION

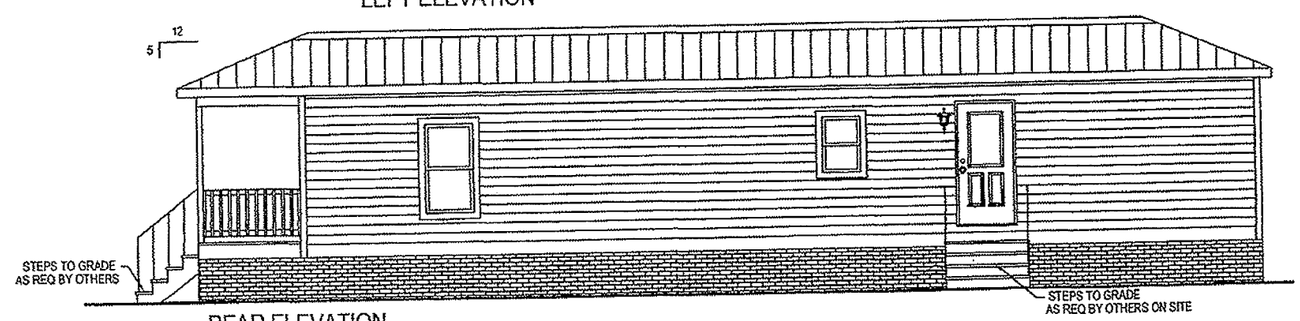

REAR ELEVATION

NADER TOMASBI
REGISTERED PROFESSIONAL
ENGINEER
16679
06/19/2007
STATE OF MISSISSIPPI

APPROVED
BY
STATE FIRE MARSHAL'S OFFICE
STATE OF MISSISSIPPI
DATE: 6/19/07

APPROVED BY
JUN 19 2007
NTA INC

Install 7/16" OSB rated sheathing 32/16 on all exterior walls. Fasten with 7/16x1 1/2"x15ga. staples 4" O.C. edge and 4" O.C. field under Hard-i-Panel. Install Hard-i-Panel per installation instructions.

Must install 15/32" OSB or plywood, 32/16 rated sheathing (unless thicker decking is required from metal roof manufacturer) under metal roof. Fasten sheathing to trusses with 7/16" x 1 1/2" x 15ga. staples or 0.131 x 2" nails 3" OC at edges and 3" OC field. Metal roof approval and installation must be provided by metal roof manufacturer for applied wind load (PE sealed) and is not part of this package.

STMS041307-22	Title: Hip Roof Elevations	dti • design • tech • inc •	Drawn By: . Date: .	Model No. 1458	Pg. 1A
			Revised By: . Date: .		

RECEIVED
JUN 19 2007
STATE MISS. INSURANCE DEPT
FIRE MARSHAL'S OFFICE

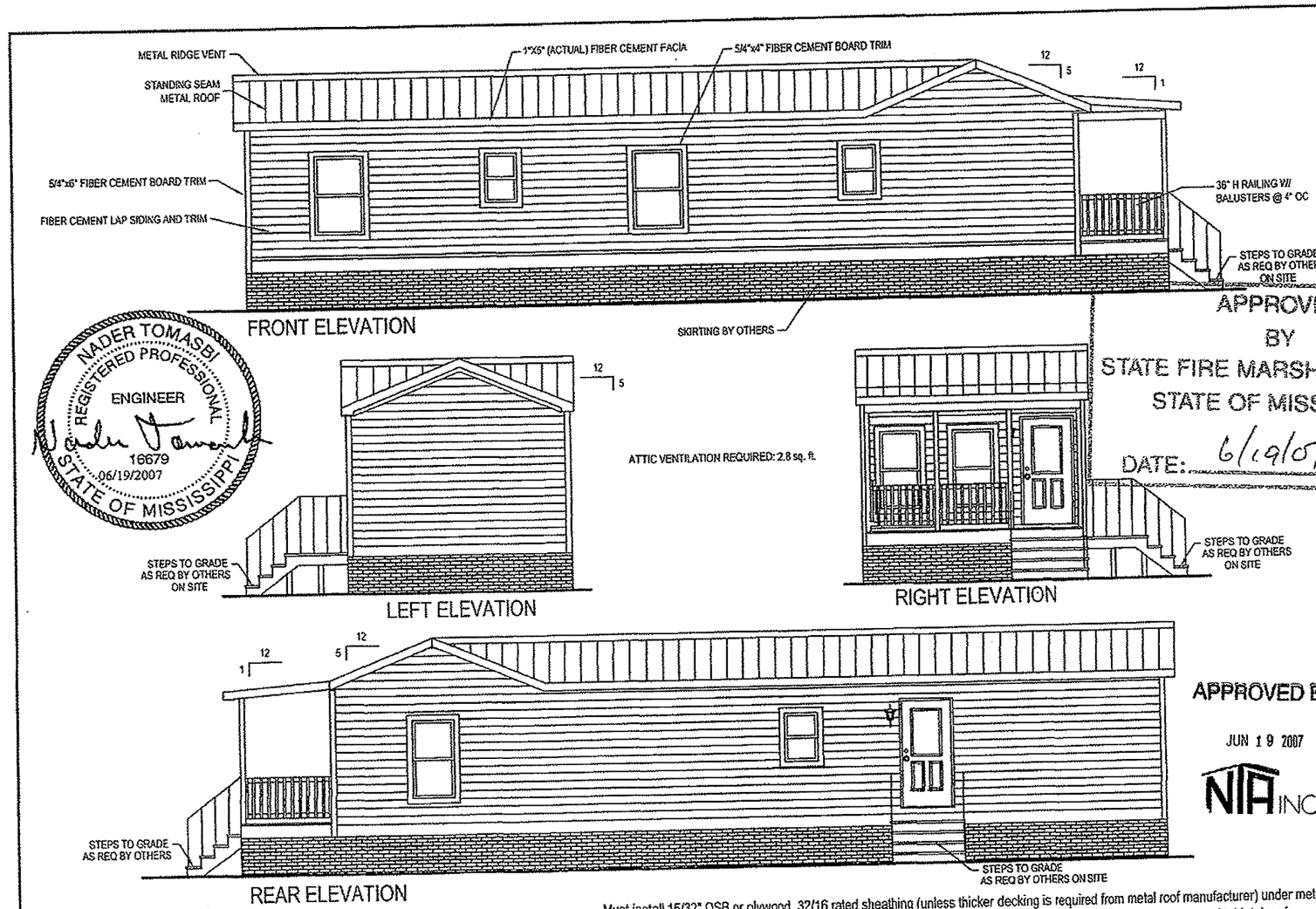

NADER TOMASBI
REGISTERED PROFESSIONAL
ENGINEER
16679
06/19/2007
STATE OF MISSISSIPPI

APPROVED
BY
STATE FIRE MARSHAL'S OFFICE
STATE OF MISSISSIPPI
DATE: 6/19/07

APPROVED BY
JUN 19 2007
NTA INC

Install 7/16" OSB rated sheathing 32/16 on all exterior walls. Fasten with 7/16x1 1/2"x15ga. staples 4" O.C. edge and 4" O.C. field under Hard-i-Panel. Install Hard-i-Panel per installation instructions.

Must install 15/32" OSB or plywood, 32/16 rated sheathing (unless thicker decking is required from metal roof manufacturer) under metal roof. Fasten sheathing to trusses with 7/16" x 1 1/2" x 15ga. staples or 0.131 x 2" nails 3" OC at edges and 3" OC field. Metal roof approval and installation must be provided by metal roof manufacturer for applied wind load (PE sealed) and is not part of this package.

STMS041307-22	Title: Elevations OPTIONAL	dti • design • tech • inc •	Drawn By: . Date: . / Revised By: . Date: .	Model No. 1458	Pg. 1.B

A TOTAL SHEAR LENGTH=156"
HUD WIND ZONE 3 AND
150 MPH,EXP.'B'=280 PLF

B TOTAL SHEAR LENGTH=108"
HUD WIND ZONE 3 AND
150 MPH,EXP.'B'=642 PLF

C TOTAL SHEAR LENGTH=108"
HUD WIND ZONE 3 AND
150 MPH,EXP.'B'=591 PLF

D TOTAL SHEAR LENGTH=44"
HUD WIND ZONE 3 AND
150 MPH,EXP.'B'=582 PLF

0 1' 2' 5' 10'
SCALE BAR

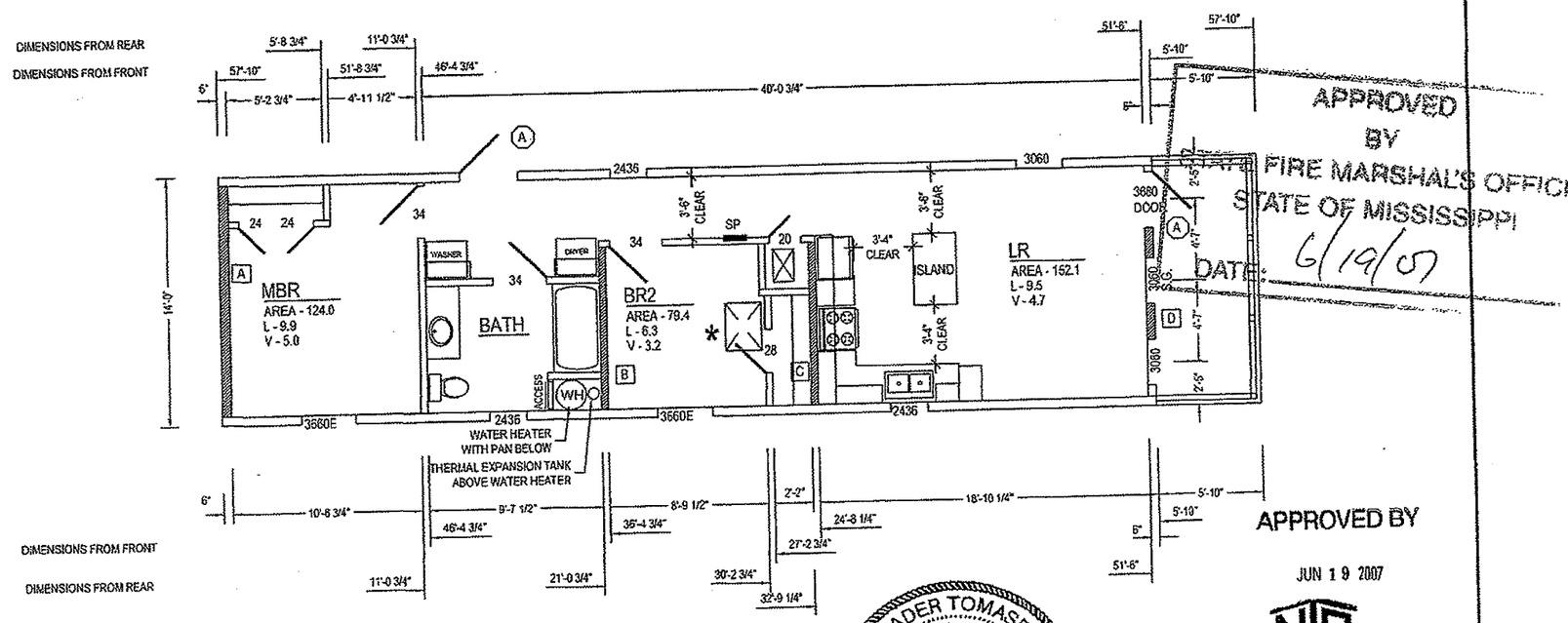

APPROVED
BY
FIRE MARSHAL'S OFFICE
STATE OF MISSISSIPPI
DATE: 6/19/07

APPROVED BY
JUN 19 2007
NTA INC

NADER TOMASBI
REGISTERED PROFESSIONAL
ENGINEER
16679
06/19/2007
STATE OF MISSISSIPPI

S.G.: SAFETY GLASS
(A) -36" MIN. DOOR WIDTH
TOTAL WINDOW AREA - 68.90 SQ. FT.
'E' - INDICATES EGRESS WINDOW
DATA PLATE LOCATION - KITCHEN BASE COVER
STATE LABEL LOCATION - KITCHEN SINK BASE CABINET
THIRD PARTY LOCATION - KITCHEN SINK BASE CABINET

NOTES:

ALL R.A.G. WILL BE IN CEILING

HVAC SYSTEMS MAY BE SUPPLIED, INSTALLED, AND INSPECTED ON SITE BY OTHERS. TYPICAL.

ALL WALLS 4 1/2" THICK UNLESS NOTED

22"X30" ATTIC ACCESS REQUIRED WHEN CLEAR HEIGHT OF ATTIC EXCEEDS 30".
* NOTE: NOT FOR STORAGE

STMS041307-22	Title: Floor Plan	dti design-tech-inc	Drawn By: . Date: . Revised By: . Date: .	Model No. 1458	Pg. 2.A

A TOTAL SHEAR LENGTH=156"
HUD WIND ZONE 3 AND
150 MPH,EXP.'B'=280 PLF

B TOTAL SHEAR LENGTH=108"
HUD WIND ZONE 3 AND
150 MPH,EXP.'B'=642 PLF

C TOTAL SHEAR LENGTH=108"
HUD WIND ZONE 3 AND
150 MPH,EXP.'B'=591 PLF

D TOTAL SHEAR LENGTH=44"
HUD WIND ZONE 3 AND
150 MPH,EXP.'B'=582 PLF

0 1' 2' 5' 10'
SCALE BAR

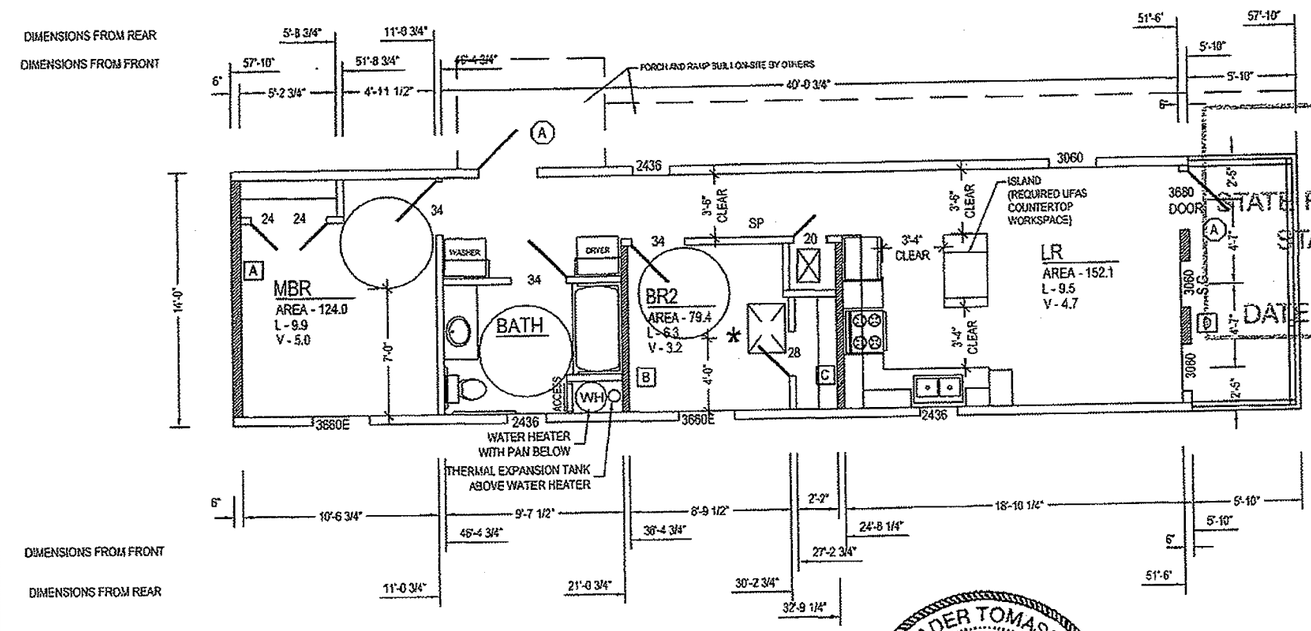

APPROVED
BY
STATE FIRE MARSHAL'S OFFICE
STATE OF MISSISSIPPI
DATE: 6/19/07

APPROVED BY
JUN 19 2007
NTA INC

NADER TOMASBI
REGISTERED PROFESSIONAL
ENGINEER
16679
06/19/2007
STATE OF MISSISSIPPI

NOTES:

ALL R.A.G. WILL BE IN CEILING

HVAC SYSTEMS MAY BE SUPPLIED, INSTALLED, AND INSPECTED ON SITE BY OTHERS, TYPICAL.

ALL WALLS 4 1/2" THICK UNLESS NOTED

22"X30" ATTIC ACCESS REQUIRED
WHEN CLEAR HEIGHT OF ATTIC EXCEEDS 30".
* NOTE: NOT FOR STORAGE

S.G.: SAFETY GLASS
(A) -36" MIN. DOOR WIDTH
TOTAL WINDOW AREA - 68.90 SQ. FT.
'E' - INDICATES EGRESS WINDOW
DATA PLATE LOCATION - KITCHEN BASE COVER
STATE LABEL LOCATION - KITCHEN SINK BASE CABINET
THIRD PARTY LOCATION - KITCHEN SINK BASE CABINET

STMS041307-22	Title: Floor Plan - UFAS	dti design•tech•inc	Drawn By: . Date: . / Revised By: . Date: .	Model No. 1458	Pg. 2.B

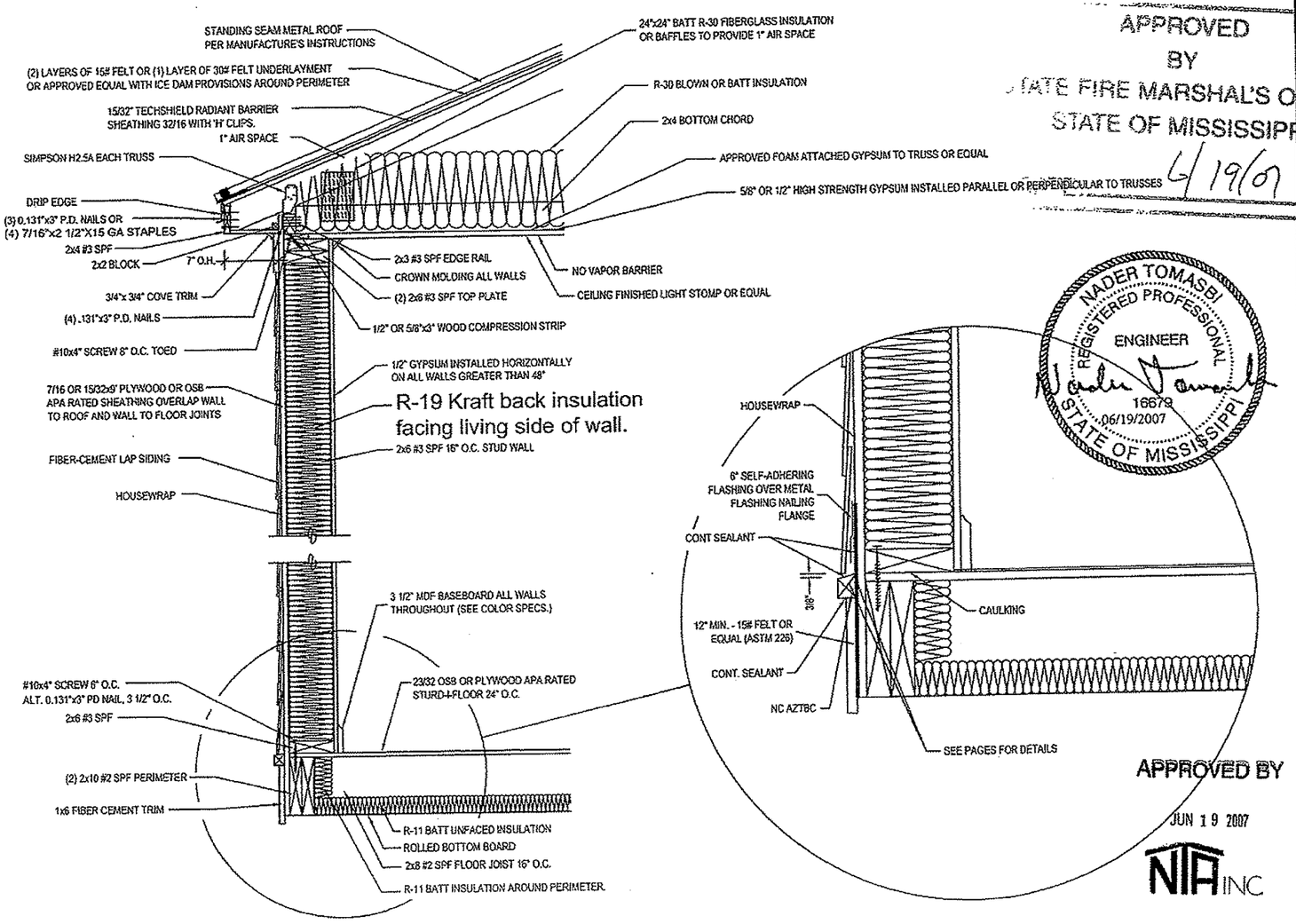

APPROVED
BY
STATE FIRE MARSHAL'S OFFICE
STATE OF MISSISSIPPI
6/19/07

NADER TOMASBI
REGISTERED PROFESSIONAL
ENGINEER
16679
06/19/2007
STATE OF MISSISSIPPI

APPROVED BY
JUN 19 2007
NTA INC

STMS041307-22	Title: Sidewall Cross Section	dti design+tech+inc	Drawn By: . Date: . / Revised By: . Date: .	Model No. 1458	Pg. 3.A

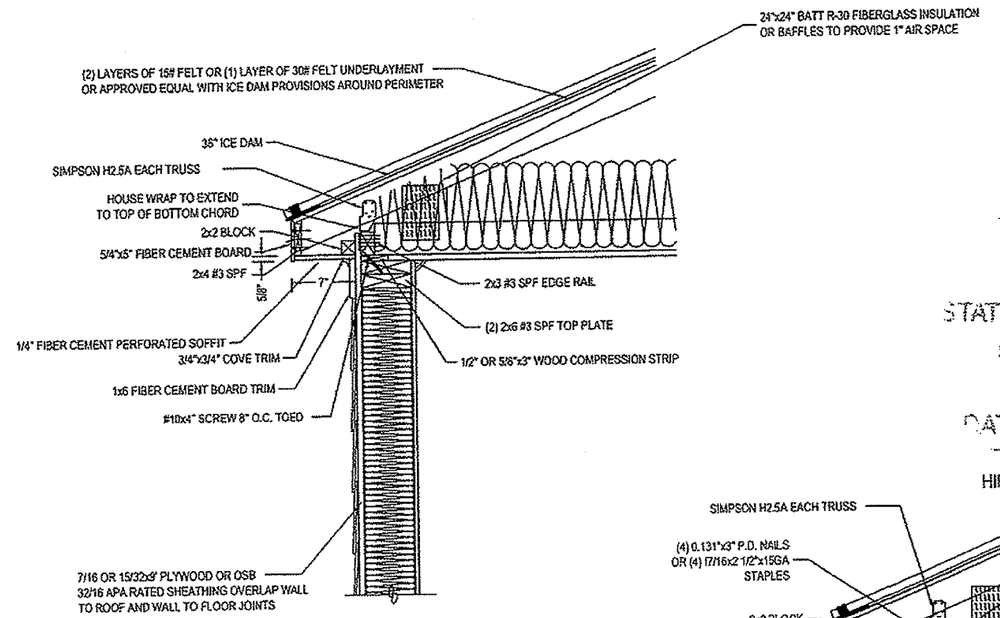

STANDARD SIDEWALL OVERHANG

NOT TO SCALE

APPROVED
BY
STATE FIRE MARSHAL'S OFFICE
STATE OF MISSISSIPPI
DATE: 6/19/07

HIP RAFTER

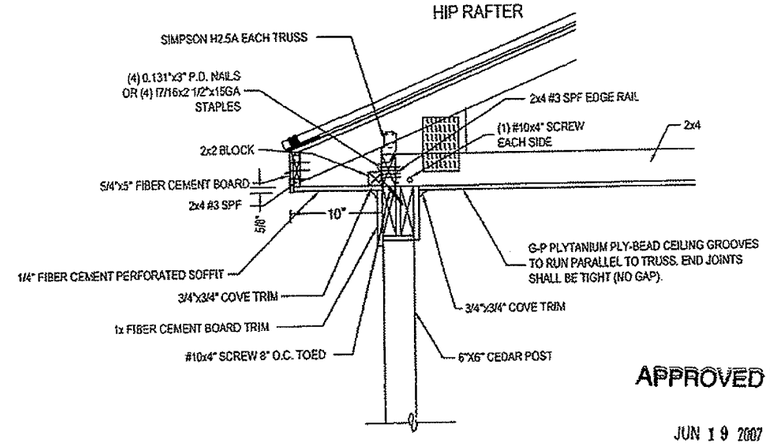

PORCH SIDEWALL OVERHANG

NOT TO SCALE

NADER TOMASBI
REGISTERED PROFESSIONAL
ENGINEER
16679
06/19/2007
STATE OF MISSISSIPPI

APPROVED BY
JUN 19 2007
NTA INC

STMS041307-22	Title: Alternate Cross Section	dti • design • tech • inc •	Drawn By: . Date: . / Revised By: . Date: .	Model No. 1458	Pg. 3.B

APPROVED
BY
STATE FIRE MARSHAL'S OFFICE
STATE OF MISSISSIPPI
DATE: 6/19/07

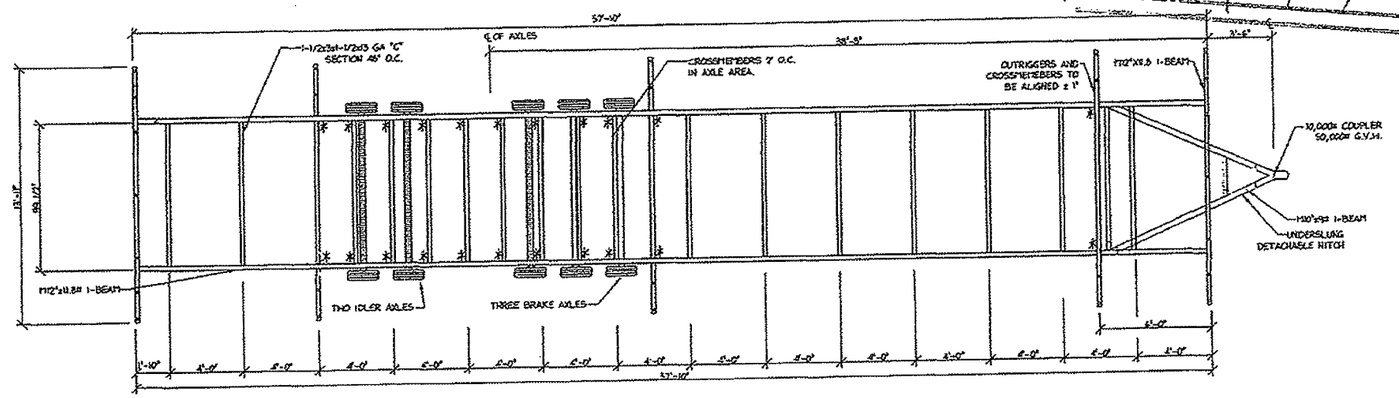

FRAME NOTES:

1. 7 HOLES IN FRONT AND REAR X-MEMBERS FOR 9"x1/2" F.T. LAGS.
   - 2 WITHIN 12" OF EACH END.
   - 2 WITHIN 6" OF EACH I-BEAM.
   - 1 LOCATED AT MID-POINT.
2. FRAME COMPLETELY COATED WITH WATER PROOF PAINT AFTER ALL WELDING IS COMPLETE.
3. WELD ALL METAL TO METAL CONTACT WITH 1/8" FILLET OR AS OTHERWISE NOTED.
4. FLOOR LAGGED TO FRAME WITH FRAME CLIP, 9"x1/2" F.T. LAGS EACH JOIST.
5. CLIPS TO BE WELDED TO I BEAM.
6. TIRE, AXLES, BRAKES AND BRAKE WIRING TO MEET ALL FEDERAL STANDARDS.
7. TIRES SHALL BE 8X14.5 10 PLY "E"
8. FIVE NEW AXLES (TRIPLE EQUALIZED PLUS TANDEM EQUALIZED SPREAD); (3) WITH BRAKES
9. RIMS, BOLTS, NUTS, OR OTHER RELATED TIRE-MOUNTING HARDWARE MUST BE NEW.
10. UNDERSLUNG DETACHABLE HITCH REMOVED AND STORED UNDER PORCH AFTER SET UP.
11. SERIAL NUMBER MUST BE STAMPED ON THE FRONT CROSSMEMBER IN 3/8" HIGH LETTERS.
12. CAMBER TO BE ADDED TO MAIN I-BEAM PER INDUSTRY STANDARDS.
13. 9"x1/2" LAGS TO HAVE A MINIMUM BENDING YIELD STRESS, F=190,000 PSI.

* ANGLE BRACKET LOCATION

APPROVED BY

JUN 19 2007

NTA INC

NADER TOMASBI
REGISTERED PROFESSIONAL ENGINEER
16679
06/19/2007
STATE OF MISSISSIPPI

STMS041307-22	Title: CARRIER FRAME	dti • design • tech • inc •	Drawn By: . Date: . / Revised By: . Date: .	Model No. 1458	Pg. 4

APPROVED
BY
STATE FIRE MARSHAL'S OFFICE
STATE OF MISSISSIPPI
DATE: 6/19/07

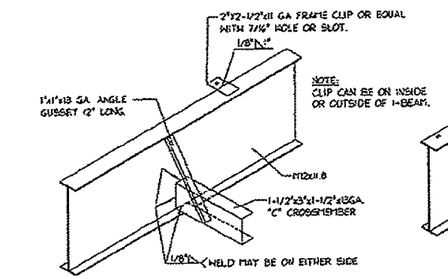

CROSSMEMBER TO I-BEAM
SCALE: NONE

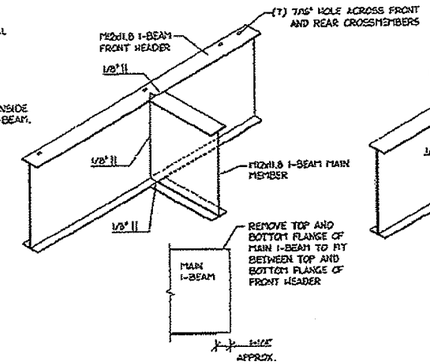

I-BEAM TO I-BEAM
SCALE: NONE

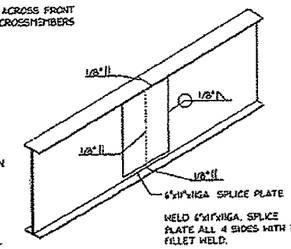

SPLICE PLATE
SCALE: NONE

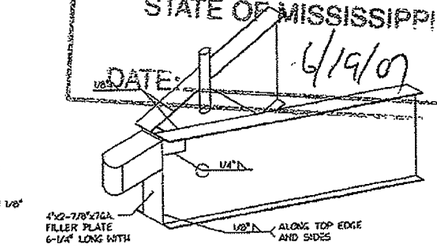

FILLER PLATE
SCALE: NONE

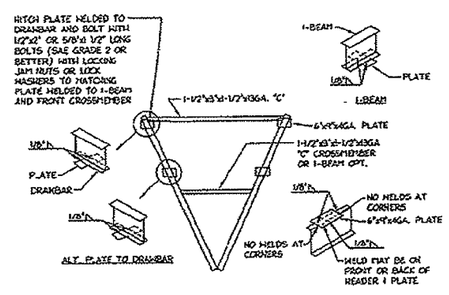

WELD DETAIL
SCALE: 3/16"=1'-0"

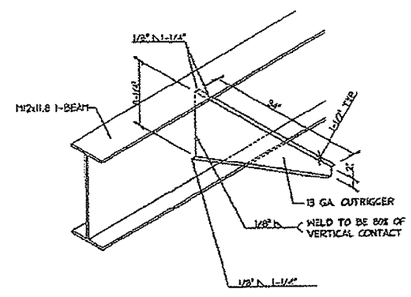

OUTRIGGER TO I-BEAM
NONE

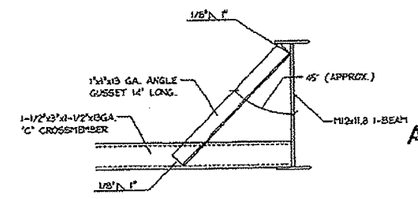

X-MEMBER GUSSET DETAIL
SCALE: NONE

APPROVED BY
JUN 19 2007
NTA INC.

NOTE:
1. WELDING TO BE DONE IN ACCORDANCE WITH AWS REQUIREMENTS.
2. WELD RODS TO BE E60XX OR E70XX OR EQUAL APPLIED PER MANUFACTURES INSTRUCTIONS.
3. ALL WELD TO BE GRIPPED.
4. FRAME TO BE COMPLETELY PAINTED AFTER WELDING IS COMPLETED.

NADER TOMASBI
REGISTERED PROFESSIONAL ENGINEER
16679
06/19/2007
STATE OF MISSISSIPPI

STMS041307-22	Title: CARRIER DETAILS	dti • design • tech • inc •	Drawn By: . Date: . / Revised By: . Date: .	Model No. 1458	Pg. 5

MAX. GROUND SNOW LOAD : 30 PSF
MAX. WIND SPEED: 150 MPH
HUD WIND ZONE 3
WIND EXPOUSURE: B
MAX MEAN ROOF HEIGHT: 30'
SEISMIC DESIGN CATEGORY: C

FOUNDATION BASE ON 2000 PSF SOIL & 1200 PSF SOIL

NOTES:
FOUNDATION TO BE DESIGNED TO MEET THE NOTED LOADS. FOUNDATION DESIGN AND TIE DOWNS MUST BE APPROVED BY LOCAL LICENSE ENGIEER/ARCHITECT

APPROVED BY STATE FIRE MARSHAL'S OFFICE STATE OF MISSISSIPPI
DATE: 6/19/07

NADER TOMASBI REGISTERED PROFESSIONAL ENGINEER 16679 06/19/2007 STATE OF MISSISSIPPI

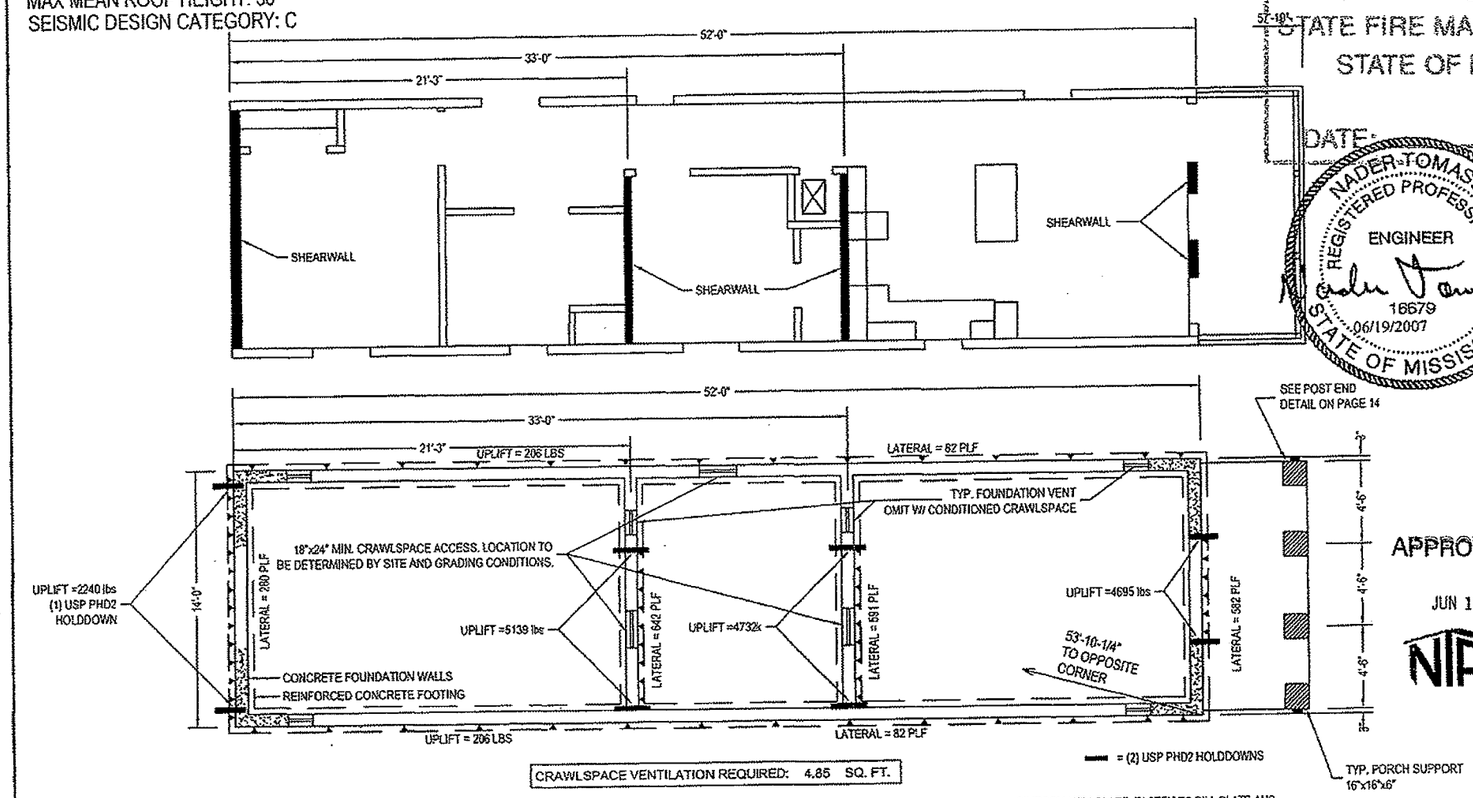

APPROVED BY
JUN 19 2007
NTA INC

CRAWLSPACE VENTILATION REQUIRED: 4.85 SQ. FT.

'OFF-FRAME' FOUNDATION NOTES:

1) FOUNDATION LAYOUT IS APPLICABLE TO NOTED MAXIMUM SNOW LOADING AND MINIMUM SOIL BEARING PRESSURE. REFER TO INSTALLATION INSTRUCTION MANUAL FOR OTHER APPLICABLE INFORMATION. CONSULT LOCAL OFFICIALS AND THE APPLICABLE LOCAL CODES FOR OTHER REQUIREMENTS (I.E. DRAINAGE, DAMP-PROOFING, BACKFILL SUPPORT, ETC.).
2) FOR DEVIATIONS AND/OR OTHER FOUNDATION DESIGNS CONSULT A LOCAL PROFESSIONAL ENGINEER AND YOUR LOCAL BUILDING OFFICIAL.
3) SILL PLATE FASTENING TO BE PER INSTALLATION INSTRUCTION AND/OR LOCAL CODES. SILL FASTENING REQUIREMENT IS PER APPLICABLE WIND SPEED AND SEISMIC ZONES. SEE YOUR HOME DATA PLATE FOR APPLICABLE ZONES.
4) CONCRETE COMPRESSIVE STRENGTH (FC'): 3000 PSI.

NOTE: SEE PAGE 6B FOR ADDITIONAL FOUNDATION INFORMATION

STMS041307-22	Title: Crawlspace Foundation (30psf)	dti design•tech•inc	Drawn By: . Date: . Revised By: . Date: .	Model No. 1458	Pg. 6.A

APPROVED
BY
STATE FIRE MARSHAL'S OFFICE
STATE OF MISSISSIPPI
DATE 6/19/07

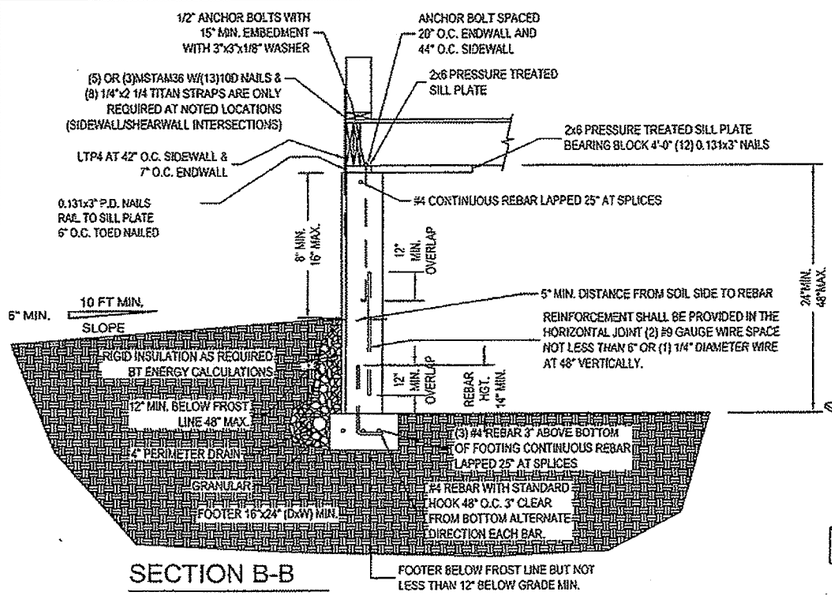

SECTION B-B

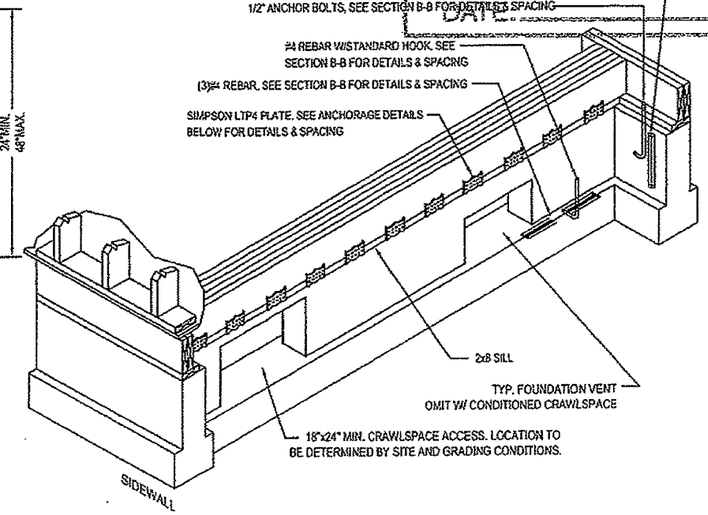

INTERIOR FOUNDATION SHEARWALL DETAIL

NOT TO SCALE

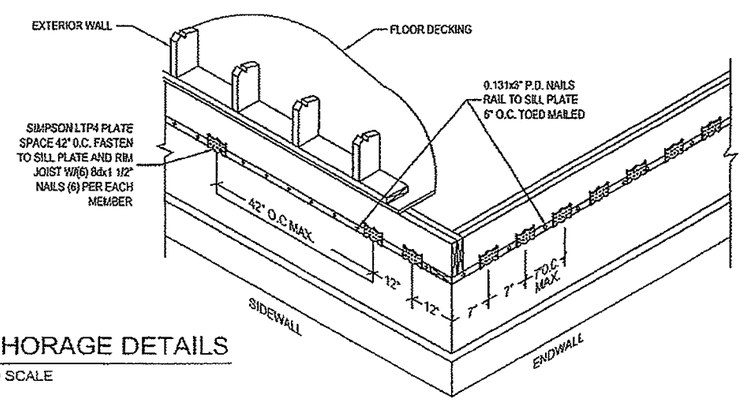

ANCHORAGE DETAILS

NOT TO SCALE

NADER TOMASBI
REGISTERED PROFESSIONAL ENGINEER
16679
06/19/2007
STATE OF MISSISSIPPI

APPROVED BY

JUN 19 2007

NTA INC

WIND SPEED 150 MPH & HUD WIND ZONE 3
SEISMIC DESIGN CATEGORY C
SOIL CLASS: GW, GP, SW, AND SP.
LATERAL SOIL LOAD: 30 PSF/FT
MAX. HEIGHT: 4'-0"
MAX. UNBALANCED FILL: 3'-4"

STMS041307-22	Title: Crawlspace Foundation (30psf)	dti design-tech-inc	Drawn By: . Date: . / Revised By: . Date: .	Model No. 1458	Pg. 6.B

APPROVED
BY
STATE FIRE MARSHAL'S OFFICE
STATE OF MISSISSIPPI
6/19/07

MAX. GROUND SNOW LOAD : 30 PSF
MAX. WIND SPEED: 150 MPH
WIND EXPOUSURE: B
HUD = WIND ZONE 3
MAX MEAN ROOF HEIGHT: 30'
SEISMIC DESIGN CATEGORY: C

FOOTING SIZE W/ CMU PIERS	SIZE MAX. LOAD (LBS.)	FOUNDATION BASE ON 2000 PSF SOIL
24"x24"x8"	7.6K	

FOOTING SIZE W/ CMU PIERS	SIZE MAX. LOAD (LBS.)	FOUNDATION BASE ON 1200 PSF SOIL
36"x36"x10"	7.9K	

NADER TOMASSI
REGISTERED PROFESSIONAL
ENGINEER
16679
06/19/2007
STATE OF MISSISSIPPI

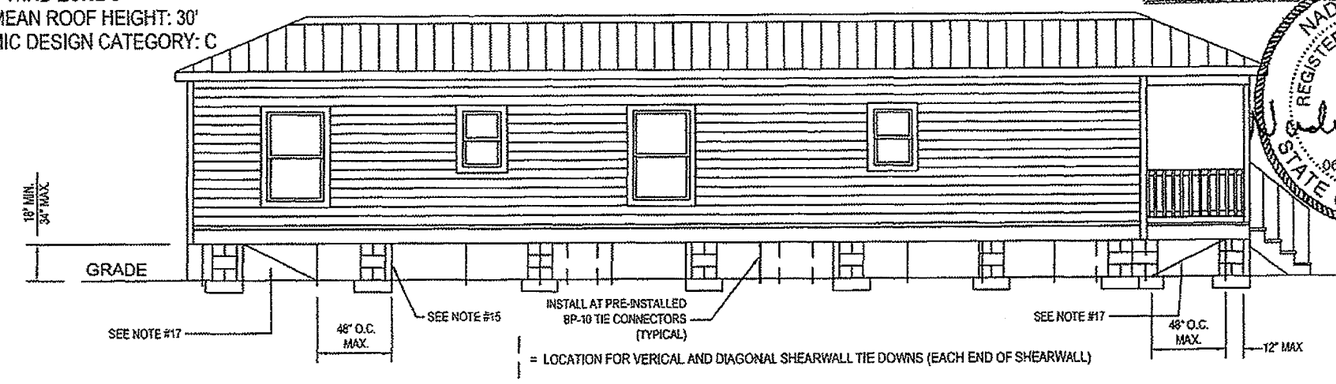

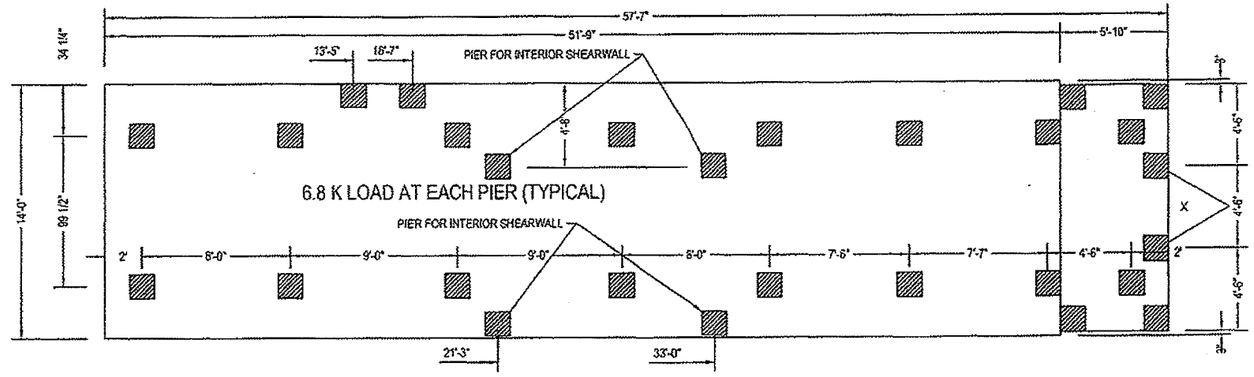

APPROVED BY
JUN 19 2007
NIA INC

'ON-FRAME STANDARD I-BEAM' FOUNDATION NOTES:

1) FOUNDATION LAYOUT IS APPLICABLE TO NOTED MAX. SNOW LOADING, WIND LOAD, SEISMIC CATEGORY & MIN. SOIL BEARING PRESSURE. REFER TO THE INSTALLATION INSTRUCTION MANUAL FOR OTHER APPLICABLE INFORMATION. CONSULT LOCAL OFFICIALS AND
2) THE APPLICABLE LOCAL CODES FOR OTHER REQUIREMENTS (I.E. DRAINAGE, DAMP-PROOFING, BACKFILL SUPPORT, ETC.). FOR DEVIATIONS &/OR OTHER FOUNDATION DESIGNS CONSULT A LOCAL PROFESSIONAL ENGINEER & YOUR LOCAL BUILDING OFFICIAL.
3) CONCRETE COMPRESSIVE STRENGTH (FC'): 3000 PSI MINIMUM.
4) ALL FOOTINGS MUST BE 12" MIN. INTO NATURAL SOIL & MUST BE BELOW FROST LINE.
5) SHEARWALL AND PERIMETER PIER LOCATIONS MUST BE MARKED TO LOCATE PIERS ON SITE.

"ABS pads may be used if the rated capacity is in excess of noted pier loads, properly approved for the site conditions and is acceptable to the Local Authority Having Jurisdiction"

STMS041307-22	Title: TEMP. FOUNDATION REQ	dti design•tech•inc	Drawn By: . Date: . Revised By: . Date: .	Model No. 1458	Pg. 7.A

NOTES:
1. ALL ORGANIC AND DECAYABLE MATERIAL, SUCH AS GRASS, ROOTS, SCRAP WOOD MUST BE REMOVED BELOW THE HOME.
2. THE SITE SHALL BE PROPERLY GRADED TO PERMIT WATER TO DRAIN UNDER AND AWAY FROM THE HOME.
3. 6-MIL POLYETHYLENE SHEETING VAPOR BARRIER MUST BE INSTALLED COVERING THE ENTIRE AREA BENEATH THE HOME. THE SHEETING SHALL OVERLAP AT LEAST 6" AT ALL JOINTS.
4. THE FOOTING MUST BE PRE-CAST OR POUR-IN-PLACE CONCRETE AT LEAST 6" THICK OR DESIGNED BY A REGISTERED ENGINEER FOR THE LOCAL SOIL CONDITIONS.
5. PIERS TO BE DOUBLE 8"x16" BLOCK. MORTAR OR EXTERIOR STRUCTURAL COATING WHEN REQUIRED BY LOCAL OFFICIALS / CODES.
6. THE PIER SHALL BE CAPPED WITH 2" MAXIMUM HIGH CONCRETE OR WOOD CAP BLOCKS AND 4"x8" HARDWOOD SHIMS TO LEVEL THE HOME. THE SHIMS SHALL COVER THE ENTIRE WIDTH OF THE CAP BLOCKS AND USED IN PAIRS AND DRIVEN TIGHTLY SO THEY DO NOT OCCUPY MORE THAN ONE INCH OF VERTICAL SPACE.
7. THE PIER SHALL BE SPACED A MAXIMUM OF 2 FEET FROM EACH END OF HOME AND A MAXIMUM OF 10 FEET ON CENTER.
8. ADDITIONAL PIERS SHALL BE LOCATED UNDER THE POSTS.
9. THE ANCHOR STRAP SHALL BE A MINIMUM TYPE 1, FINISH B, GRADE ONE STEEL STRAPPING, 1 1/4" WIDE AND 0.035 INCHES THICK CERTIFIED BY A REGISTER ENGINEER CONFORMING WITH ASTM STANDARD D3953.91.
10. THE GROUND ANCHORS MUST HAVE A MINIMUM DESIGN CAPACITY FOR THE SOILS INTENDED OF 3150# CERTIFIED BY A REGISTERED ENGINEER.
11. THE GROUND ANCHORS MUST BE INSTALLED PER THE MANUFACTURERS INSTALLATION REQUIREMENTS.
12. THE TIE-DOWN STRAPS MUST BE PRETENSIONED PER THE MANUFACTURERS INSTALLATION INSTRUCTIONS.
13. ALL GROUND ANCHORS MUST BE LOCATED 12" ABOVE THE WATER TABLE.
14. ALL GROUND ANCHORS MUST BE INSTALLED BELOW THE FROST LINE.
15. VERTICAL AND DIAGONAL TIES 12" FROM PORCH END AND 4'-0" O.C. AND IN LINE WITH DIAGONAL TIES.
16. ADDITIONAL VERTICAL TIES SHALL BE LOCATED AT INTERIOR SHEARWALL LOCATIONS.
17. LONGITUDINAL TIES AT EACH I-BEAM EACH END.

APPROVED
BY
STATE FIRE MARSHAL'S OFFICE
STATE OF MISSISSIPPI
DATE: 6/19/07

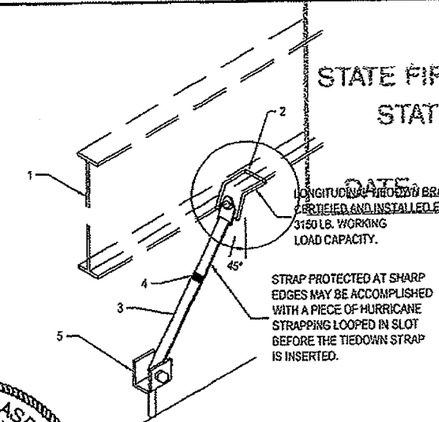

APPROVED BY
JUN 19 2007
NIA INC

NADER TOMASBI
REGISTERED PROFESSIONAL ENGINEER
16679
06/19/2007
STATE OF MISSISSIPPI

LONGITUDINAL TIEDOWN ATTACHMENT DETAIL

1. TYPICAL LONGITUDINAL I-BEAM
2. FACTORY INSTALLED TIEDOWN BRACKET
3. LONGITUDINAL TIEDOWN STRAP
4. BANDING SEAL
5. GROUND ANCHOR-INSTALLED TO FULL DEPTH

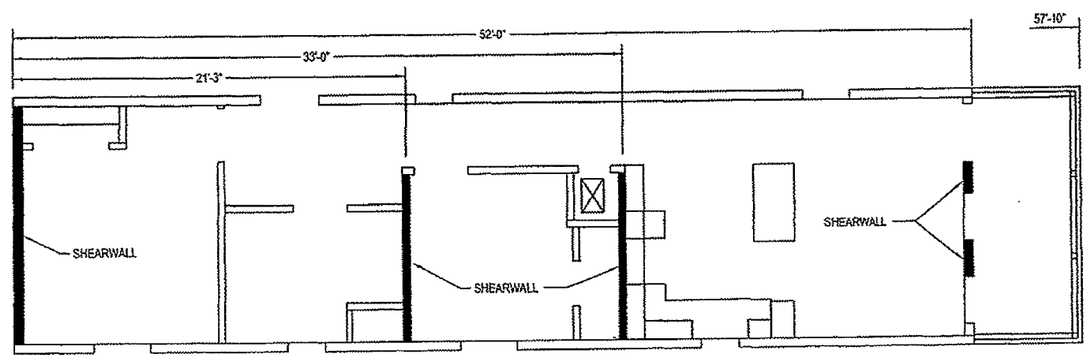

STMS041307-22	Title: TEMP. FOUNDATION REQ	dti design-tech-inc	Drawn By: . Date: . Revised By: . Date: .	Model No. 1458	Pg. 7.B

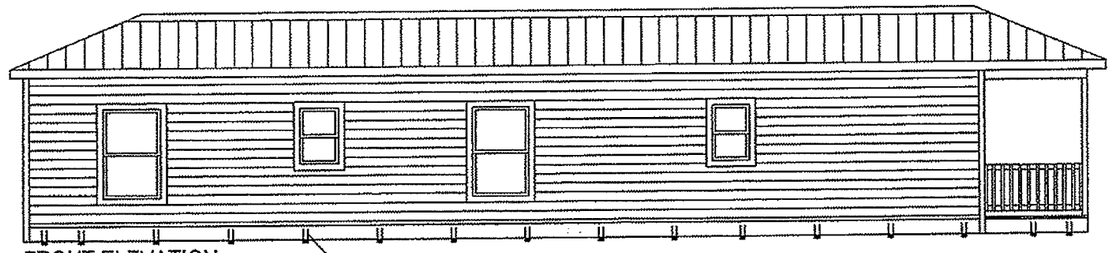

FRONT ELEVATION

48" TYP.

* INSTALL BP-10 TIE CONNECTOR BY BUILDING TECHNOLOGIES (FASTEN TO BOTTOM PLATE W/(2) #8x3" SCREWS) OR 16 GA. RIM JOIST BRACKET BY MASTERCRAFT FASTEN TO RIM W/(5)0.131x1 1/2" NAILS OR (5)#6x1 1/2" SCREWS) OR EQUIVALENT 48" O.C.

NADER TOMASSI
REGISTERED PROFESSIONAL ENGINEER
16679
06/19/2007
STATE OF MISSISSIPPI

APPROVED BY STATE FIRE MARSHAL'S OF STATE OF MISSISSIPPI
DATE: 6/19/07

* ALTERNATE ANGLE BRACKET MAY BE USED IN PLACE OF BP-10.
LAG HOLES = 7/16" DIA. TYP. TOLERANCE DIMENSIONS+/- 1/8"
SLOT = 1 1/2" X 3/8" (CENTERED), GAUGE" 11
MAX. BRACKET CAPACITY 1746 LBS.
BRACKET FASTENED TO PERIMETER JOIST WITH (2) 5/16" X 3" LAG SCREWS. PERIMETER JOIST DOES NOT HAVE TO BE PRE-DRILLED.

NOTE:
1. MAY USE ANY OTHER EQUIVALENT METHODS FOR VERTICAL STRAPS.
2. CONNECTORS SHOWN ARE ONLY FOR TEMPORARY INSTALLS AND MUST BE REMOVED FOR PERMANENT SET UP.

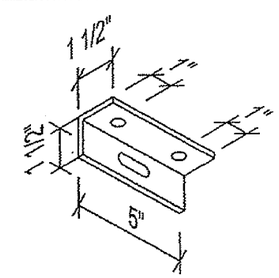

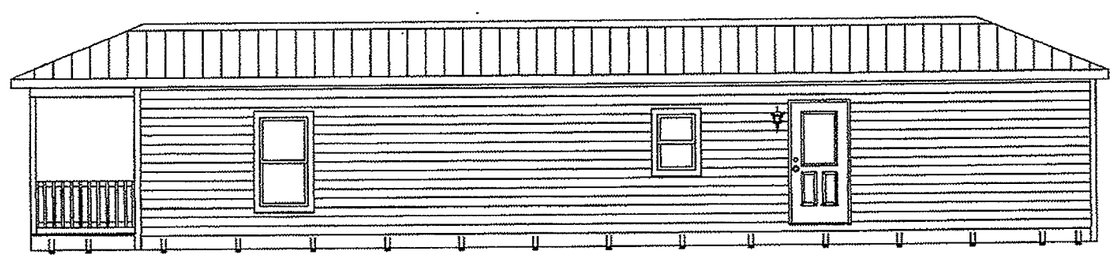

REAR ELEVATION

48" TYP.

APPROVED BY
JUN 19 2007
NTA INC

TEMPORARY

STMS041307-22	Title: Temporary Foundation Tie down Strapping	dti design•tech•inc	Drawn By: . Date: . Revised By: . Date: .	Model No. 1458	Pg. 7.C

APPROVED
BY
STATE FIRE MARSHAL'S OFFICE
STATE OF MISSISSIPPI
DATE: 6/20/07

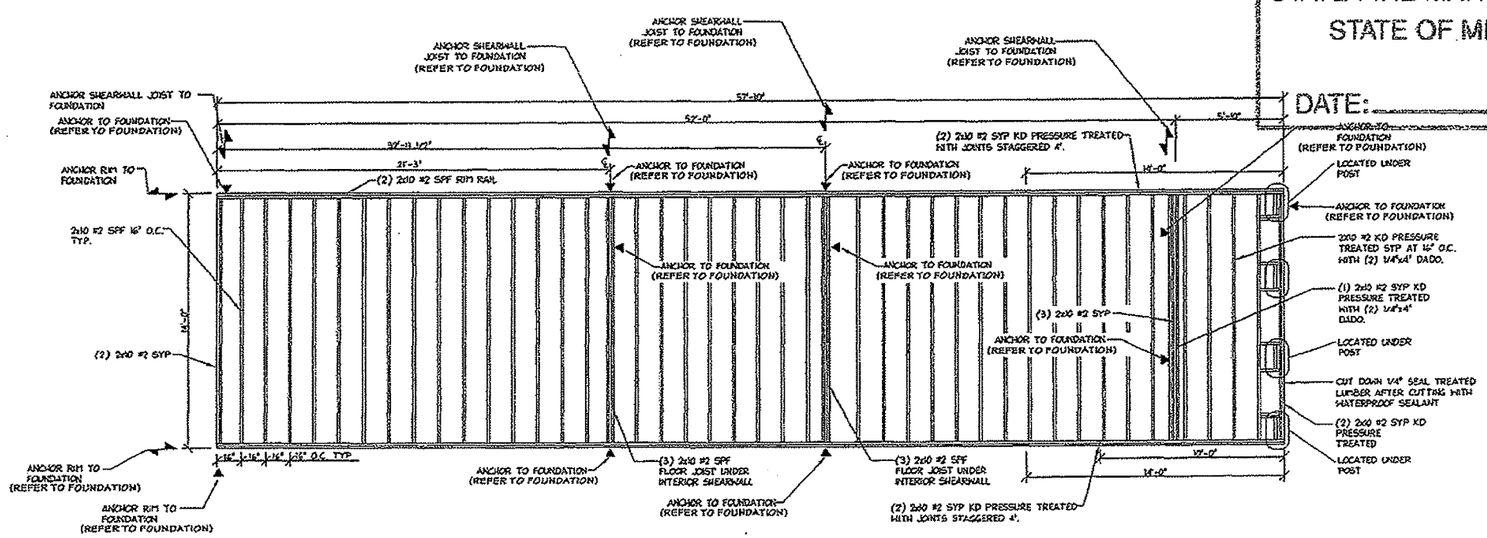

FLOOR FRAMING

FRAMING NOTES:

1. PERIMETER RAIL TO TRANSVERSE JOIST (8) .131x3" P.D. NAILS.
2. PERIMETER SPLICE 4x4x20 GA CONNECTOR EACH SIDE OR EQUAL.
3. DOUBLE JOIST .131x3" P.D. NAILS 2 ROWS 12" O.C. STAGGERED.
4. 23/32 OSB OR PLYWOOD APA RATED STURD-I-FLOOR 24" O.C. DECKING TO JOIST 7/16x6-3/16x16 GA STAPLE OR .099x2" P.D. NAILS 4" O.C. EDGE 8" O.C. FIELD WITH 100% ADHESIVE.
5. ADHESIVE REQUIRED ON TAG AND PERIMETER RAILS.
6. COMPOSITE DECK BOARD TO JOIST (2) #8x2" SCREWS PER JOIST (COMPOSITE DECK BOARD TO BE INSTALLED PER MANUFACTURERS INSTRUCTIONS).
7. BOTTOM BOARD (MFG. SHEPHARD MOBILE FLEX OR EQUAL) FASTENED WITH 1"x3/4"x16 GA STAPLES 4" O.C.
8. ALL FASTENERS AND CONNECTOR PLATES INTO TREATED LUMBER MUST BE STAINLESS STEEL OR GALVANIZED STEEL APPROVED FOR TREATED LUMBER.
9. BOTTOM BOARD AND INSULATION NOT INSTALLED IN PORCH AREA.
10. MULTIPLE JOIST FASTENED TOGETHER WITH (2) ROWS OF .131"x3" P.D. NAILS, OR 7/16"x2 1/2"x16GA. STAPLES 6" O.C. WITH 100% ADHESIVE.
11. NOTCHES IN JOIST TO BE PER IRC R502.5 OR HUD 3280.305g

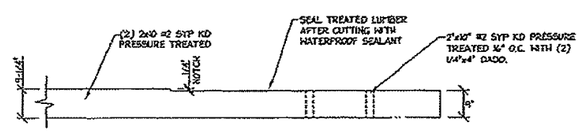

EDGE RAIL NOTCH AT PORCH (OPTIONAL)

NTS

APPROVED BY
JUN 19 2007
NTA INC

NADER TOMASBI
REGISTERED PROFESSIONAL ENGINEER
16679
06/19/2007
STATE OF MISSISSIPPI

HARRISON COUNTY, PROVIDE THAT WOOD JOISTS OR THE BOTTOM OF A WOOD STRUCTURAL FLOOR WHEN CLOSER THAN 18" OR WOOD GIRDERS WHEN CLOSER THAN 12" TO THE EXPOSED GROUND IN CRAWLSPACES OR UNEXCAVATED AREA LOCATED WITHIN THE PEROPHERY OF THE BUILDING FOUNDATION SHALL BE TREATED.

STMS041307-22	Title: FLOOR FRAMING	dti +design+tech+inc+	Drawn By: . Date: . / Revised By: . Date: .	Model No. 1458	Pg. 8

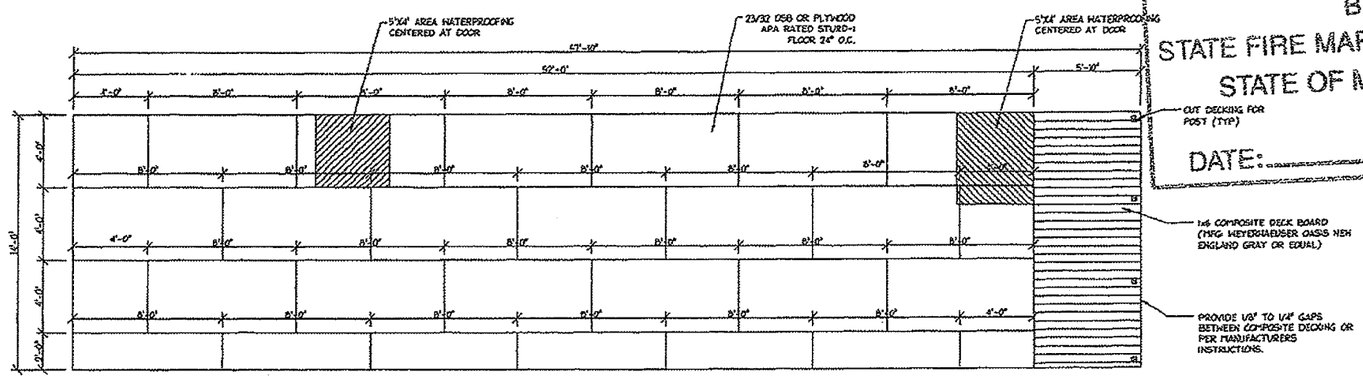

APPROVED
BY
STATE FIRE MARSHAL'S OFFICE
STATE OF MISSISSIPPI
DATE: 6/19/07

FLOOR DECKING

NOTE: FULL WIDTH DECKING OPTIONAL

FRAMING NOTES:

1. PERIMETER RAIL TO TRANSVERSE JOIST (8) .131x3" P.D. NAILS.
2. PERIMETER SPLICE 4x4x20 GA CONNECTOR EACH SIDE OR EQUAL.
3. DOUBLE JOIST .131x3" P.D. NAILS 2 ROWS 12" O.C. STAGGERED.
4. 23/32 OSB OR PLYWOOD APA RATED STURD-I-FLOOR 24" O.C. DECKING TO JOIST 7/16x1-3/4x15 GA STAPLE OR .099x2" P.D. NAILS 4" O.C. EDGE 8" O.C. FIELD WITH 100% ADHESIVE.
5. ADHESIVE REQUIRED ON T&G AND PERIMETER RAILS.
6. COMPOSITE DECK BOARD TO JOIST (2) #8x2" SCREWS PER JOIST (COMPOSITE DECK BOARD TO BE INSTALLED PER MANUFACTURERS INSTRUCTIONS).
7. BOTTOM BOARD (MFG.: SHEPHARD MOBILEFLEX OR EQUAL) FASTENED WITH 1"x3/4"x16 GA STAPLES 4" O.C.
8. ALL FASTENERS AND CONNECTOR PLATES INTO TREATED LUMBER MUST BE STAINLESS STEEL OR GALVANIZED STEEL APPROVED FOR TREATED LUMBER.
9. BOTTOM BOARD AND INSULATION NOT INSTALLED IN PORCH AREA.
10. MULTIPLE JOIST FASTENED TOGETHER WITH (2) ROWS OF .131"x3" P.D. NAILS. OR 7/16"x2 1/2"x15GA. STAPLES 6" O.C. WITH 100% ADHESIVE.
11. ALL DECKING SEAMS MUST BE SANDED UNDER LINOLEUM OR TILE

APPROVED BY

JUN 19 2007

NTA INC

NADER TOMASBI
REGISTERED PROFESSIONAL
ENGINEER
16679
06/19/2007
STATE OF MISSISSIPPI

STMS041307-22	Title: FLOOR DECKING	dti ◆design·tech·inc◆	Drawn By: . Date: . / Revised By: . Date: .	Model No. 1458	Pg. 9

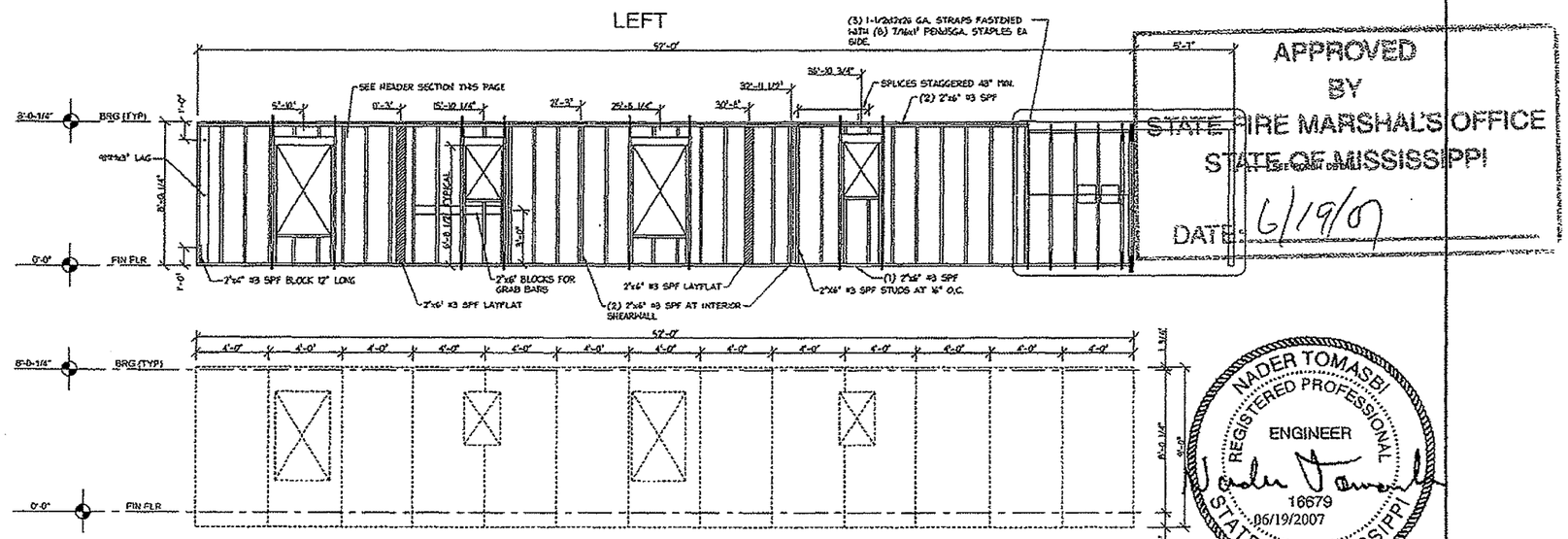

APPROVED BY STATE FIRE MARSHAL'S OFFICE STATE OF MISSISSIPPI DATE: 6/19/07

NADER TOMASBI REGISTERED PROFESSIONAL ENGINEER 16679 06/19/2007 STATE OF MISSISSIPPI

STUD PLACEMENT & SHEATHING ELEVATIONS

WALL FRAMING NOTES:

1. FASTEN WALL TO FLOOR WITH (3) #8x3" SCREWS OR (3) .131"x3" P.D. NAILS EVERY 16" O.C.
2. FASTEN 1/2" DRYWALL TO STUDS WITH #6x1 1/4" DRY WALL SCREWS OR 1-5/8" DRYWALL NAILS 8" O.C. EDGES AND #6x1-1/4" DRYWALL SCREWS 16" O.C. FIELD WITH 100% ADHESIVE

2.A 1/2" DRYWALL INSTALLED HORIZONTAL ON ALL WALLS GREATER THAN 48".

3. FASTEN TOP AND BOTTOM PLATES TO STUDS WITH (5) .131"x3" P.D. NAILS OR (7) .7/16"x2-1/2"x15 GAUGE STAPLES
4. FASTEN DOUBLE TOP PLATES WITH .131"x3": P.D. NAILS OR 7/16"x2-1/2"x15 GAUGE STAPLES 6" O.C.
5. FASTEN 7/16" OSB OR 15/32" PLYWOOD RATED SHEATHING 32/16" INDEX TO STUDS WITH 7/16"x1-1/2" 15 GAUGE STAPLES 6" O.C. EDGES AND FIELD
6. 7/16" OSB OR 15/32" PLYWOOD 4'x9' RATED SHEATHING 32/16 INDEX CONTINUOUS OVER JOINTS BETWEEN FLOOR/WALL AND WALL/ROOF EXCEPT AT FRONT ENDWALL.
7. FASTENING OF SHEATHING TO PERIMETER FLOOR JOIST AND ROOF EDGE RAIL 7/16"x1-1/2"x15 GAUGE STAPLES 3" O.C.
8. FASTEN SHEATHING TO ENDWALLS AND WITHIN 4' OF CORNER OR SIDE WALLS WITH 7/16"x2-1/2"x15 GAUGE STAPLES 3" O.C. EDGE, 6" O.C. FEILD.
9. HEADERS AND SILLS FASTEN TO STUD WITH (5) .131"x3" P.D. NAILS OR (7) 7/16"x2-1/2"x15 GAUGE STAPLES EACH END EACH MEMBER.
10. MULTIPLE STUDS FASTEN ON TOGETHER WITH .131"x3" P.D. NAILS OR 7/16"x2-1/2"x15 GAUGE STAPLE 6" O.C.
11. WALL TO WALLS FASTENED TOGETHER WITH .131"x3" P.D. NAILS OR #8x3" SCREW 10" O.C PLUS (3) 9"1"x3" LAGS (ONE LAG 1" FROM TOP AND BOTTOM OF STUD AND ONE LAG AT MID-POINT).
12. STRAP EACH STUD TO RIM JOIST AT DOORS AND WINDOWS (SIDEWALL) WITH 1-1/2"x12"x26 GAUGE. STRAP FASTENERS WITH (8) 7/16"x1" PEN x15 GA STAPLES OR (8) .120x1-1/2" P.D. NAIL EACH END AND AT 2X6 HEADER AT PORCH AS SHOWN.
13. HOUSE WRAP INSTALLED PER MANUFACTURERS INSTRUCTIONS.
14. EXTERIOR SIDING INSTALLED PER MANUFACTURERS INSTRUCTIONS FOR HIGH WIND
15. WINDOWS INSTALLED PER MANUFACTURERS INSTRUCTIONS FOR DP RATING 54.2 MIN.
16. IMPACT RESISTANCE MUST BE MET FOR WINDOWS AND DOORS.
17. SPLICE BOTTOM PLATE AND LOWER TOP PLATE 3"X5"X20" GAUGE CONNECTOR PLATE EACH SIDE OR EQUAL.
18. FASTEN ENDWALL TO SIDEWALL TOP PLATES WITH 3"x6"x.035 PLATE WITH (6) .131"x3" P.D. NAILS EACH SIDE EQUAL.
19. NOTCHING IN STUDS SHALL BE PER IRC R602.6 OR HUD 3280.305g

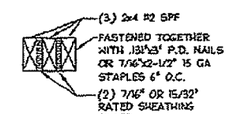

HEADER SECTION
SCALE: NONE

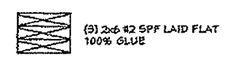

ALT. HEADER SECTION
SCALE: NONE

APPROVED BY
JUN 19 2007
NIA INC

STMS041307-22	Title: LEFT SIDEWALL	dti design-tech-inc	Drawn By: . Date: . / Revised By: . Date: .	Model No. 1458	Pg. 10

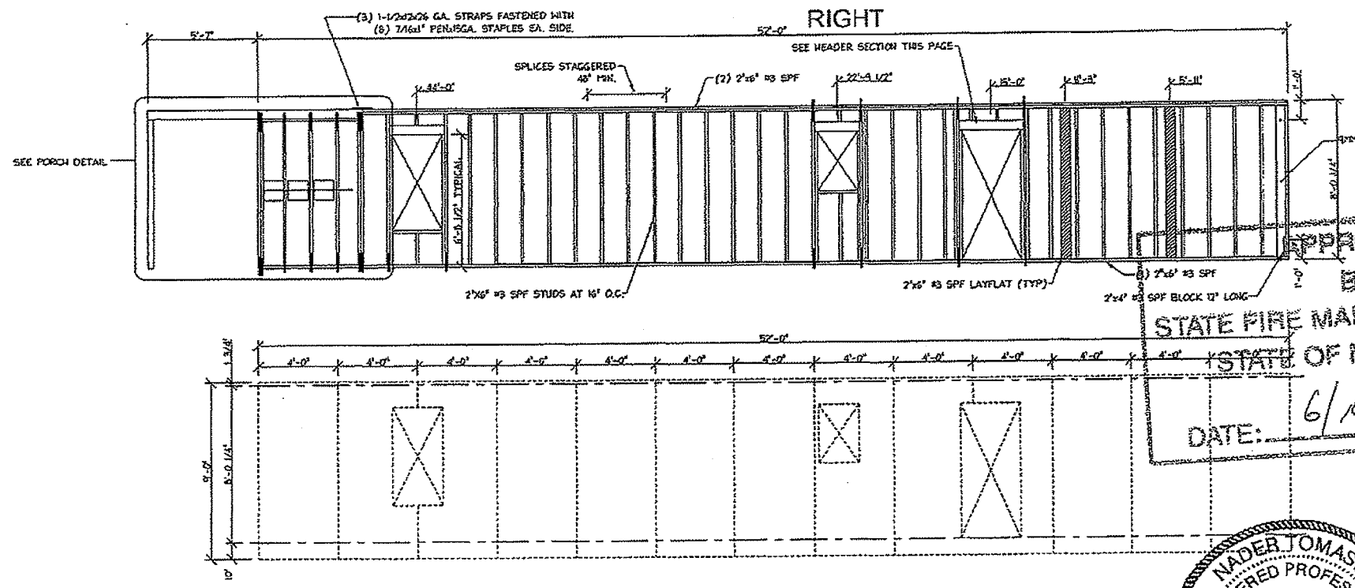

APPROVED BY
STATE FIRE MARSHAL'S OFFICE
STATE OF MISSISSIPPI
DATE: 6/19/07

APPROVED BY
JUN 19 2007

NADER TOMASBI
REGISTERED PROFESSIONAL ENGINEER
16679
06/19/2007
STATE OF MISSISSIPPI

STUD PLACEMENT & SHEATHING PLAN 1A- ELEVATION B

WALL FRAMING NOTES:

1. FASTEN WALL TO FLOOR WITH (3) #8x3" SCREWS OR (3) .131"x3" P.D. NAILS EVERY 16" O.C.
2. FASTEN 1/2" DRYWALL TO STUDS WITH #6x1 1/4" DRY WALL SCREWS OR 1-5/8" DRYWALL NAILS 8" O.C. EDGES AND #6x1-1/4" DRYWALL SCREWS 16" O.C FIELD WITH 100% ADHESIVE
2.A 1/2" DRYWALL INSTALLED HORIZONTAL ON ALL WALLS GREATER THAN 48".
3. FASTEN TOP AND BOTTOM PLATES TO STUDS WITH (5) .131"x3" P.D. NAILS OR (7) .7/16"x2-1/2"x15 GAUGE STAPLES
4. FASTEN DOUBLE TOP PLATES WITH .131"x3", P.D. NAILS OR 7/16"x2-1/2"x15 GAUGE STAPLES 6" O.C.
5. FASTEN 7/16" OSB OR 15/32" PLYWOOD RATED SHEATHING 32/16" INDEX TO STUDS WITH 7/16"x1-1/2" 15 GAUGE STAPLES 6" O.C. EDGES AND FIELD
6. 7/16" OSB OR 15/32" PLYWOOD 4x9 RATED SHEATHING 32/16 INDEX CONTINUOUS OVER JOINTS BETWEEN FLOOR/WALL AND WALL/ROOF EXCEPT AT FRONT ENDWALL.
7. FASTENING OF SHEATHING TO PERIMETER FLOOR JOIST AND ROOF EDGE RAIL 7/16"x1-1/2"x15 GAUGE STAPLES 3"O.C.
8. FASTEN SHEATHING TO ENDWALLS AND WITHIN 4' OF CORNER ON SIDE WALLS WITH 7/16"x2-1/2"x15 GAUGE STAPLES 3" O.C. EDGE, 6" O.C. FIELD.
9. HEADERS AND SILLS FASTEN TO STUD WITH (5) .131"x3" P.D. NAILS OR (7) 7/16"x2-1/2"x15 GAUGE STAPLES EACH END EACH MEMBER.
10. MULTIPLE STUDS FASTEN ON TOGETHER WITH .131"x3" P.D. NAILS OR 7/16"x2-1/2"x15 GAUGE STAPLE 6" O.C.
11. WALL TO WALLS FASTENED TOGETHER WITH .131"x3" P.D. NAILS OR #8x3" SCREW 10" O.C PLUS (3) 5/16"x3" LAGS (ONE LAG 1" FROM TOP AND BOTTOM OF STUD AND ONE LAG AT MID-POINT).
12. STRAP EACH STUD TO RIM JOIST AT DOORS AND WINDOWS (SIDEWALL) WITH 1-1/2"x12"x26 GAUGE, STRAP FASTENERS WITH (8) 7/16"x1" PEN x15 GA STAPLES OR (8) .120x1-1/2" P.D. NAIL EACH END AND AT 2X6 HEADER AT PORCH AS SHOWN.
13. HOUSE WRAP INSTALLED PER MANUFACTURERS INSTRUCTIONS.
14. EXTERIOR SIDING INSTALLED PER MANUFACTURERS INSTRUCTIONS FOR HIGH WIND
15. WINDOWS INSTALLED PER MANUFACTURERS INSTRUCTIONS FOR DP RATING 54.2 MIN.
16. IMPACT RESISTANCE MUST BE MET FOR WINDOWS AND DOORS.
17. SPLICE BOTTOM PLATE AND LOWER TOP PLATE 3"x3"X20" GAUGE CONNECTOR PLATE EACH SIDE OR EQUAL.
18. FASTEN ENDWALL TO SIDEWALL TOP PLATES WITH 3"x6"x.035 PLATE WITH (4) .131"x3" P.D. NAILS EACH SIDE EQUAL.
19. NOTCHING IN STUDS SHALL BE PER IRC R602.6 OR HUD 3280.305g

NTA INC

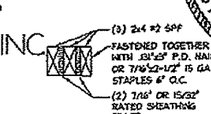

HEADER SECTION
SCALE: NONE

ALT. HEADER SECTION
SCALE: NONE

STMS041307-22	Title: RIGHT SIDEWALL	dti ◆design◆tech◆inc◆	Drawn By: . Date: . / Revised By: . Date: .	Model No. 1458	Pg. 11

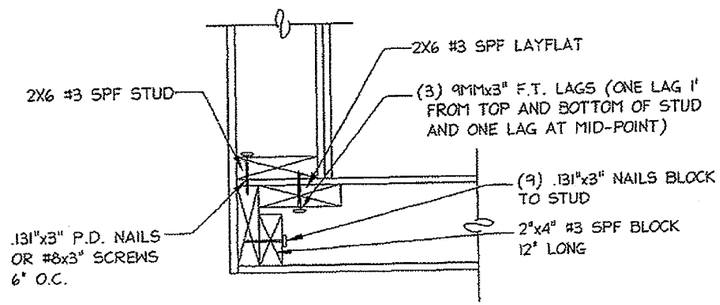

CORNER STUD DETAIL

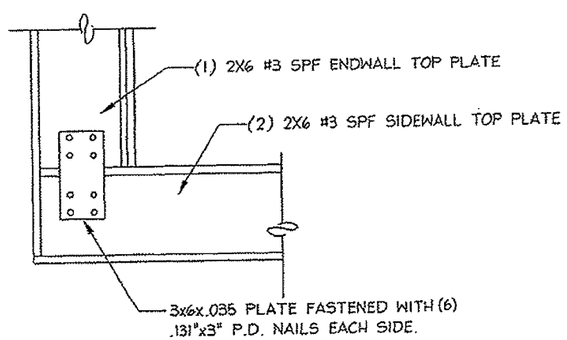

CORNER TOP PLATE DETAIL

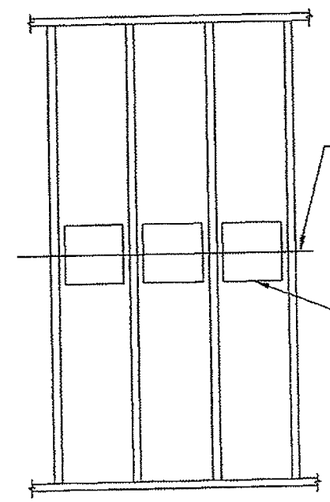

DRYWALL JOINT REINFORCEMENT DETAIL

NOTE:
OPTIONAL REINFORCEMENT MAY BE USED AT THE APPROVAL OF THE ENGINEER OF RECORD.

APPROVED BY
STATE FIRE MARSHAL'S OFFICE
STATE OF MISSISSIPPI
DATE: 6/19/07

NADER TOMASBI
REGISTERED PROFESSIONAL ENGINEER
16679
06/19/2007
STATE OF MISSISSIPPI

APPROVED BY
JUN 19 2007
NIA INC

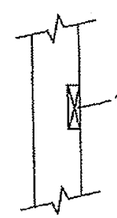

ALT. NOTCH DETAIL

STMS041307-22	Title: SIDEWALL DETAILS	dti design·tech·inc	Drawn By: . Date: . / Revised By: . Date: .	Model No. 1458	Pg. 12

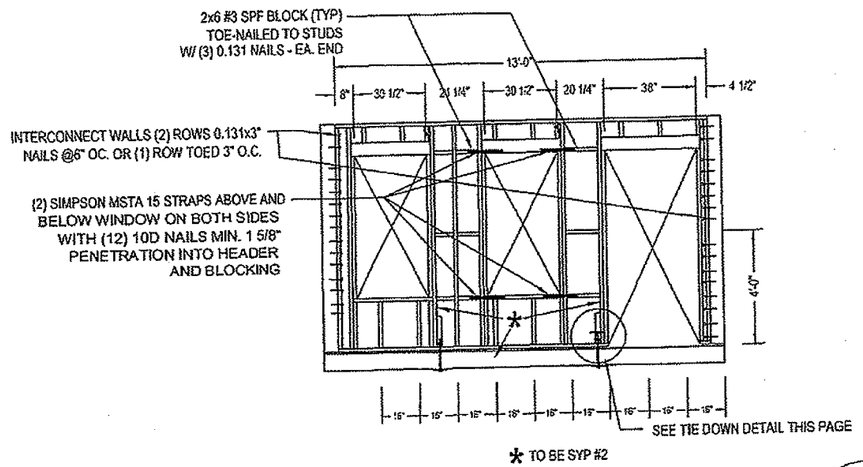

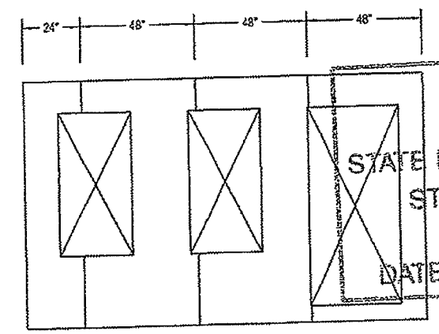

APPROVED
BY
STATE FIRE MARSHAL'S OFFICE
STATE OF MISSISSIPPI
DATE: 6/19/07

7/16" APA RATED SHEATHING WITH STUDS AT 16" O.C. BOTH FACES, WITH .131x3" NAILS AT 3" O.C. EDGE AND 6" O.C. FIELD PANEL FORCE 582 PLF.

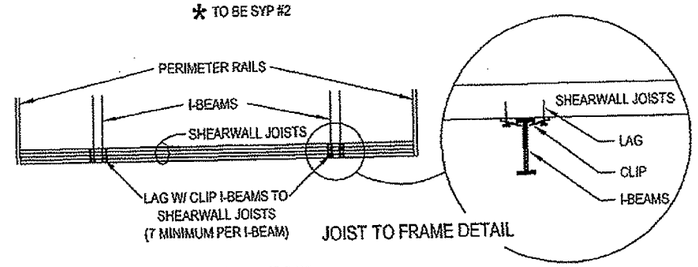

JOIST TO FRAME DETAIL

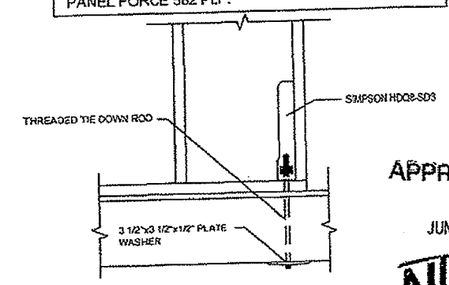

ALTERNATIVE
TIE DOWN DETAIL
SCALE: NONE

APPROVED BY
JUN 19 2007
NIA INC

WALL FRAMING NOTES:

1. FASTEN BOTTOM PLATE TO JOIST WITH .131x3" NAILS OR #8x3" SCREWS AT 3" O.C. (16 PER BAY)
2. FASTEN 1/2" DRYWALL TO STUDS WITH #6 X 1 1/4" DRY WALL SCREWS OR 1 5/8" DRYWALL NAILS 8"O.C. EDGES 16" O.C. FIELD WITH 100% ADHESIVE
3. FASTEN TOP AND BOTTOM PLATES TO STUDS WITH (3) .131X3"P.D. NAILS OR (4) 7/16 X 21/2 X 15 GAUGE STAPLES
4. FASTEN DOUBLE TOP PLATES WITH 0.131 X 3" P.D. NAILS 6" O.C. OR 7/16 X 2 1/2 X 15 GAUGE STAPLES 4" O.C.
5. FASTENING OF SHEATHING TO PERIMETER FLOOR JOIST AND ROOF EDGE RAIL 7/16 X 1 1/2 X 15 GAUGE STAPLES 3" O.C.
6. FASTEN SHEATHING TO ENDWALLS AND WITHIN 4' OF CORNER ON SIDE WALLS WITH 7/16 X 2 1/2 X 15 GAUGE STAPLES 3" O.C. EDGE, 6" O.C. FIELD MIN.
7. HEADERS AND SILLS FASTEN TO STUD WITH (5) .131X3" P.D. NAILS OR (7) 7/16 X 2 1/2 X 15 GAUGE STAPLES EACH AND EACH MEMBER.
8. MULTIPLE STUDS FASTEN ON TOGETHER WITH .131 X 3" P.D. NAILS OR 7/16 X 2 1/2 X 15 GAUGE STAPLE 2" O.C.
9. STRAP EACH STUD TO RIM JOIST AT DOORS AND WINDOWS WITH 1 1/2 X 12" X 26 GAUGE. STRAP FASTENERS WITH (8) 7/16 X 1 PEN X 15 GA STAPELS OR (8) .120 X 1 1/2 P.D. NAIL EACH END.
10. HOUSE WRAP INSTALLED PER MANUFACTURERS INSTRUCTIONS.
11. EXTERIOR SIDING INSTALLED PER MANUFACTURERS INSTRUCTIONS FOR HIGH WIND
12. WINDOWS INSTALLED PER MANUFACTURERS INSTRUCTIONS FOR DP RATING 52.5 MIN.
13. SPLICE BOTTOM PLATE AND LOWER TOP PLATE 3X5X20 GAUGE CONNECTOR PLATE EACH SIDE OR 12" 2x6 BLOCK.
14. FASTEN ENDWALL TO SIDEWALL TOP PLATES WITH 3"x6"x.035 PLATE WITH (4) .13x3" NAILS EACH SIDE EQUAL.

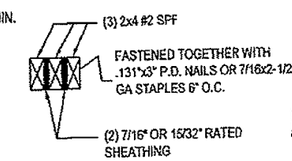

HEADER SECTION
SCALE: NONE

NADER TOMASBI
REGISTERED PROFESSIONAL
ENGINEER
16679
06/19/2007
STATE OF MISSISSIPPI

STMS041307-22	Title: Front Shearwall	dti design-tech-inc	Drawn By: . Date: . / Revised By: . Date: .	Model No. 1458	Pg. 13.A

WALL FRAMING NOTES:

1. FASTEN WALL TO FLOOR AND WALL TO CEILING WITH (7) # 8X3" SCREWS PER BAY
2. FASTEN 1/2" DRYWALL TO STUDS WITH #6 X 1 1/4" DRY WALL SCREWS OR 1 5/8" DRYWALL NAILS 8" O.C. EDGES 16" O.C. FIELD WITH 100% ADHESIVE
3. FASTEN TOP AND BOTTOM PLATES TO STUDS WITH (3) 0.131x3" P.D. NAILS OR (3) 7/16"x2 1/2"x15 GAUGE STAPLES
4. HEADERS FASTEN TO STUD WITH (3) 0.131x3" P.D. NAILS OR (3) 7/16"x2 1/2"x15 GAUGE STAPLES EACH AND EACH MEMBER.
5. WALL TO WALLS FASTENED TOGETHER WITH 0.131x3" P.D. NAILS OR #8x3" SC. 4" O.C. DIRECT OR TOED.

7/16" APA RATED SHEATHING WITH STUDS AT 16" O.C. ON BOTH SIDES, WITH 0.131x3" NAILS AT 4" O.C. EDGE AND 6" O.C. FIELD OR 15 GA STAPLES 3" O.C. AND 12" FIELD. STAGGER NAILS IN DOUBLE STUDS AT PANEL EDGES SHEARWALL PANEL FORCE 642 PLF.

APPROVED BY
STATE FIRE MARSHAL'S OFFICE
STATE OF MISSISSIPPI
DATE 6/19/07

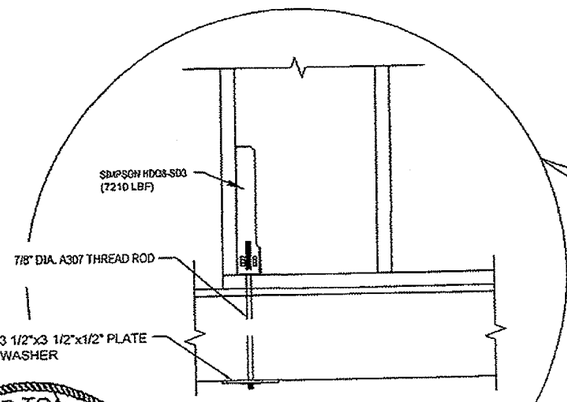

TIE DOWN DETAIL
SCALE: NONE

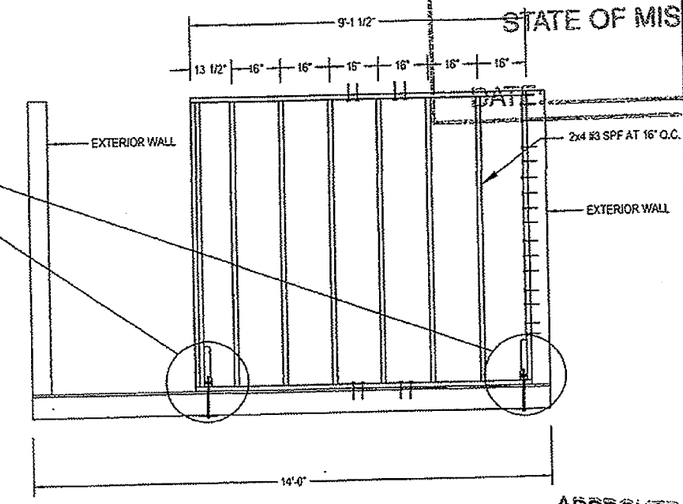

NADER TOMASBI
REGISTERED PROFESSIONAL ENGINEER
16679
06/19/2007
STATE OF MISSISSIPPI

APPROVED BY
JUN 19 2007
NTA INC

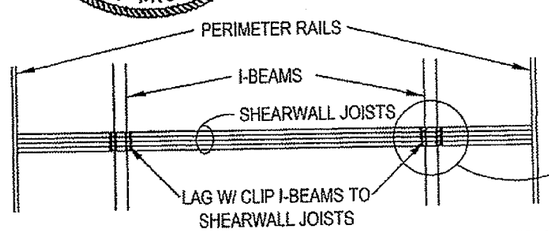

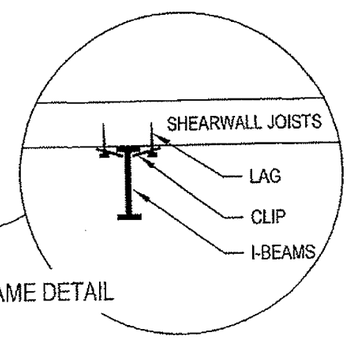

JOIST TO FRAME DETAIL

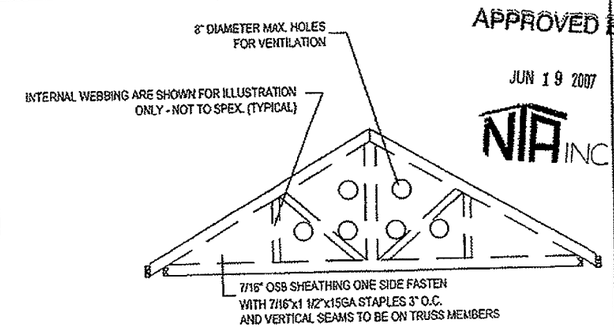

INTERIOR SHEARWALL TRUSS
SCALE: NONE

STMS041307-22	Title: Interior Shearwall	dti design•tech•inc	Drawn By: . Date: . / Revised By: . Date: .	Model No. 1458	Pg. 13.B

7/16" OSB APA RATED SHEATHING WITH STUDS AT 16" O.C. OR 15/32 PLYWOOD RATED SHEATHING WITH 0.131x3" NAILS AT 6" O.C. EDGE AND 6" O.C. FIELD OR 15 GAGE STAPLES AT 4" O.C. EDGE AND 6" O.C. FIELD. SHEARWALL PANEL FORCE IS 280 PLF.

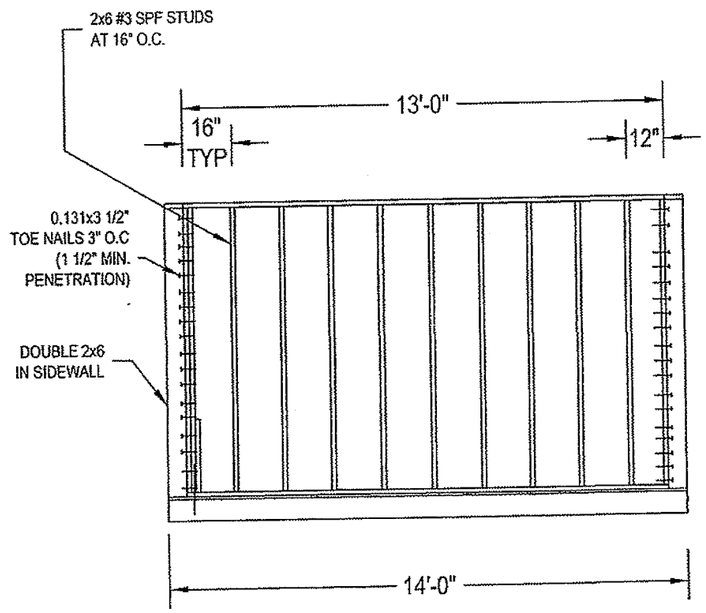

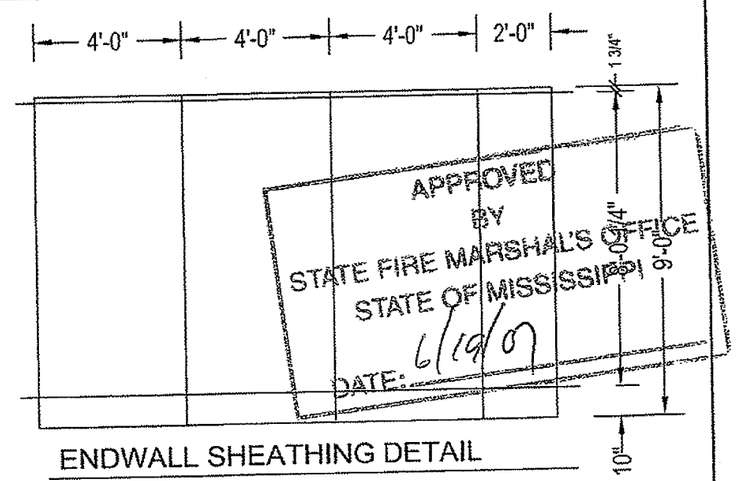

ENDWALL SHEATHING DETAIL

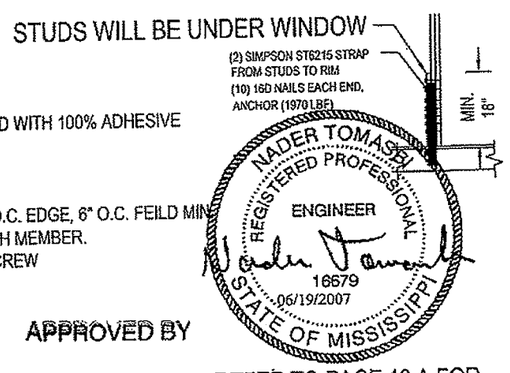

WALL FRAMING NOTES:

1. FASTEN BOTTOM PLATE TO JOIST WITH .131x3" NAILS OR #8x3" SCREWS AT 3" O.C. (16 PER BAY)
2. FASTEN 1/2" DRYWALL TO STUDS WITH #6 X 1 1/4" DRY WALL SCREWS OR 1 5/8" DRYWALL NAILS 8"O.C. EDGES 16" O.C. FIELD WITH 100% ADHESIVE
3. FASTEN TOP AND BOTTOM PLATES TO STUDS WITH (3) .131X3"P.D. NAILS OR (4) .7/16 X 21/2 X 15 GAUGE STAPLES
4. FASTEN DOUBLE TOP PLATES WITH 0.131 X 3" P.D. NAILS 6" O.C. OR 7/16 X 2 1/2 X 15 GAUGE STAPLES 4" O.C.
5. FASTENING OF SHEATHING TO PERIMETER FLOOR JOIST AND ROOF EDGE RAIL 7/16 X 1 1/2 X 15 GAUGE STAPLES 3" O.C.
6. FASTEN SHEATHING TO ENDWALLS AND WITHIN 4' OF CORNER ON SIDE WALLS WITH 7/16 X 2 1/2 X 15 GAUGE STAPLES 3" O.C. EDGE, 6" O.C. FEILD MIN
7. HEADERS AND SILLS FASTEN TO STUD WITH (5) .131X3" P.D. NAILS OR (7) 7/16 X 2 1/2 X 15 GAUGE STAPLES EACH AND EACH MEMBER.
8. MULTIPLE STUDS FASTEN ON TOGETHER WITH .131 X 3" P.D. NAILS OR 7/16 X 2 1/2 X 15 GAUGE STAPLE 2" O.C. OR #8x3" SCREW
9. STRAP EACH STUD TO RIM JOIST AT DOORS AND WINDOWS WITH 1 1/2 X 12" X 26 GAUGE. STRAP FASTENERS WITH (8) 7/16 X 1 PEN X 15 GA STAPELS OR (8) .120 X 1 1/2 P.D. NAIL EACH END.
10. HOUSE WRAP INSTALLED PER MANUFACTURERS INSTRUCTIONS.
11. EXTERIOR SIDING INSTALLED PER MANUFACTURERS INSTRUCTIONS FOR HIGH WIND
12. WINDOWS INSTALLED PER MANUFACTURERS INSTRUCTIONS FOR DP RATING 52.5 MIN.
13. SPLICE BOTTOM PLATE AND LOWER TOP PLATE 3X5X20 GAUGE CONNECTOR PLATE EACH SIDE OR 12" 2x6 BLOCK.
14. FASTEN ENDWALL TO SIDEWALL TOP PLATES WITH 3"x6"x.035 PLATE WITH (4) .13x3" NAILS EACH SIDE EQUAL.

APPROVED BY STATE FIRE MARSHAL'S OFFICE STATE OF MISSISSIPPI DATE: 6/19/07

NADER TOMASSI REGISTERED PROFESSIONAL ENGINEER 16679 06/19/2007 STATE OF MISSISSIPPI

APPROVED BY

JUN 19 2007

NTA INC

REFER TO PAGE 13.A FOR JOIST TO FRAME DETAIL

STMS041307-22	Title: Rear Shearwall	dti design+tech+inc	Drawn By: . Date: . Revised By: . Date: .	Model No. 1458	Pg. 13.C

3'x6' MAX. WINDOW SIZE x 54.2 PSF=975.2#
SCREWS: 82x1.6x1" PENT. = 131#
975.2/13=7.4 OR 8 SCREWS.

PERIMETER OF SMALLEST
WINDOW (2+3)x2x12-120"

120/8=15" O.C.

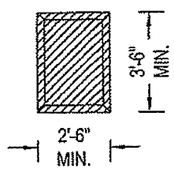

KITCHEN,HALL,BA WINDOW
3-REQ.
1x3 EDGES FRAMING
SQUARE OR 45° CUT
WITH 7/16" OSB COVERING
MINIMUM

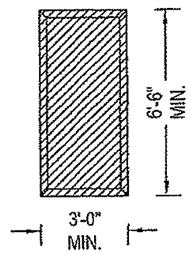

LIVING & DINING ROOM WINDOW
3-REQ.
1x3 EDGES FRAMING
SQUARE OR 45° CUT
WITH 7/16" OSB COVERING
MINIMUM

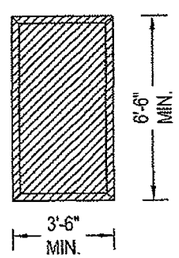

BEDROOM WINDOW
2-REQ.
1x3 EDGES FRAMING
SQUARE OR 45° CUT
WITH 7/16" OSB COVERING
MINIMUM

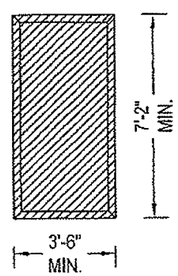

OPTIONAL FRONT DOOR
1-REQ.
1x3 EDGES FRAMING
SQUARE OR 45° CUT
WITH 7/16" OSB COVERING
MINIMUM

HOMES INSTALLED IN WIND-DEBRIS REGIONS MUST HAVE PROVISIONS TO PROTECT THE EXTERIOR GLAZING IN WINDOWS AND DOOR. LOCAL OFFICIAL MUST BE CONSULTED TO DETERMINE IF YOUR SPECIFIC AREA IS LOCATED IN WIND-DEBRIS REGIONS. THE PROTECTION FOR EXTERIOR GLAZING MAY BE PROVIDED.

A 7/16" MINIMUM APA RATE SHEATHING SHALL MUST BE PROVIDED. SHEATHING SHALL BE PRECUT SO THEY SHALL BE ATTACHED TO THE FRAMING SURROUNDING THE OPENING CONTAINING THE PRODUCT WITH THE GLAZED OPENING. PANEL SHALL BE PREDRILLED AS REQUIRED FOR THE FASTENING AND ALL REQUIRED HARDWARE SHALL BE PROVIDED.

APPROVED
BY
STATE FIRE MARSHAL'S OF
STATE OF MISSISSIPP
DATE: 6/19/07

NOTE:
PRE-ENGINEERED WINDOW/DOOR PROTECTORS MAY BE INSTALL ON-SITE BY OTHERS. (MUST MEET ALL STATE & LOCAL CODE REQUIREMENTS

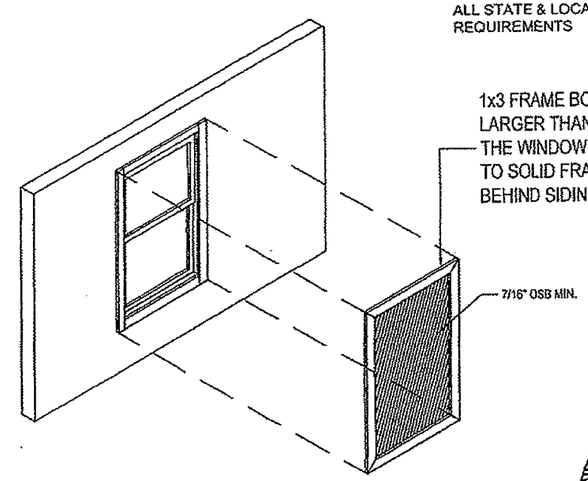

1x3 FRAME BOARD INSIDE DIMENSION TO BE LARGER THAN OUTSIDE DIMENSION OF THE WINDOW FRAME AND FASTENED TO SOLID FRAMING MEMBE BEHIND SIDING.

APPROVED BY
JUN 19 2007
NIA INC

USE #8 SCREWS (1" MIN. PENETRATION INTO RECEIVING MEMBER) 15" O.C. MAX.

NADER TOMASBI
REGISTERED PROFESSIONAL
ENGINEER
16679
06/19/2007
STATE OF MISSISSIPPI

WIND BORNE DEBRIS PROTECTION DETAIL

STMS041307-22	Title: Ship Loose Window Protectors	dti ◆design◆tech◆inc◆	Drawn By: . Date: . / Revised By: . Date: .	Model No. 1458	Pg. 14

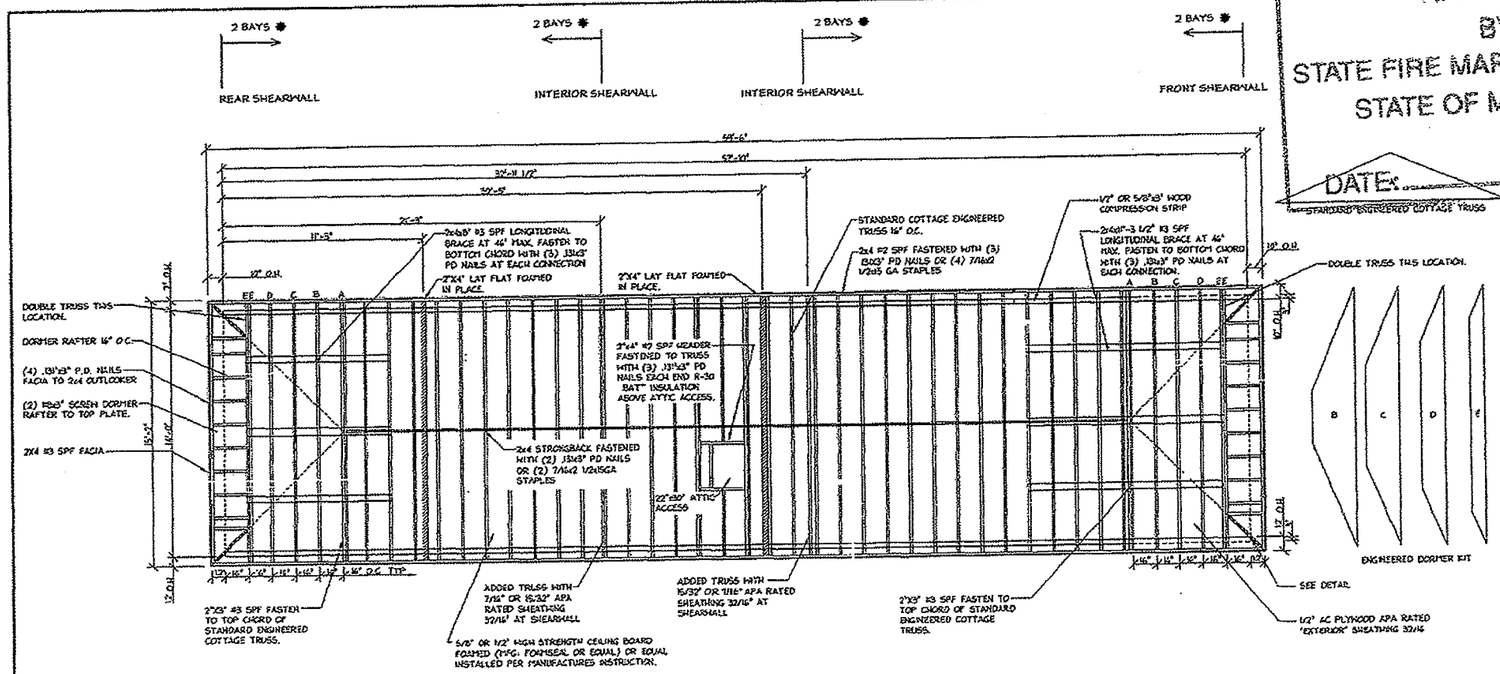

APPROVED BY
STATE FIRE MARSHAL'S OFFICE
STATE OF MISSISSIPPI
DATE: 6/19/07

ROOF FRAMING

1. 15/32" PLYWOOD APA RATED SHEATHING 32/16" ROOF DECKING FASTENED TO TRUSSES WITH 7/16"x1 1/2"x15 GA STAPLES 3" O.C.
2. 15/32" PLYWOOD APA RATED SHEATHING 32/16 FASTENED TO END TRUSSES AT SHEARWALL AND AT INTERIOR SHEARWALL WITH 7/16"x1 1/2"x15 GA STAPLES 3" O.C. TOP AND BOTTOM CORD.
3. 1/2" OR 5/8"x3" WOOD COMPRESSION STRIP ON TOP OF SIDEWALLS ONLY (CUT BACK 1/2" OR 5/8" GYPSUM CEILING BOARD)

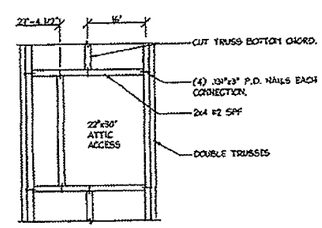

CUT TRUSS DETAIL
SCALE: NONE

APPROVED BY
JUN 19 2007
NTA INC.

NADER TOMASBI
REGISTERED PROFESSIONAL ENGINEER
16679
06/19/2007
STATE OF MISSISSIPPI

* ROOF DIAPHRAGM BLOCKING REQ'D. BLOCK ROOF SHEATHING AT ALL EDGES IN TRUSS BAYS NOTED ABOVE. FASTEN SHEATHING TO BLOCKS AS SPECIFIED IN PAGES 1.A AND 1.B.
BLOCKS MAY BE 2X8 #3 SPF FASTENED TO TRUSSES WITH (2) 10d NAILS TOED.

STMS041307-22	Title: ROOF FRAMING	dti • design • tech • inc	Drawn By: . Date: . / Revised By: . Date: .	Model No. 1458	Pg. 15

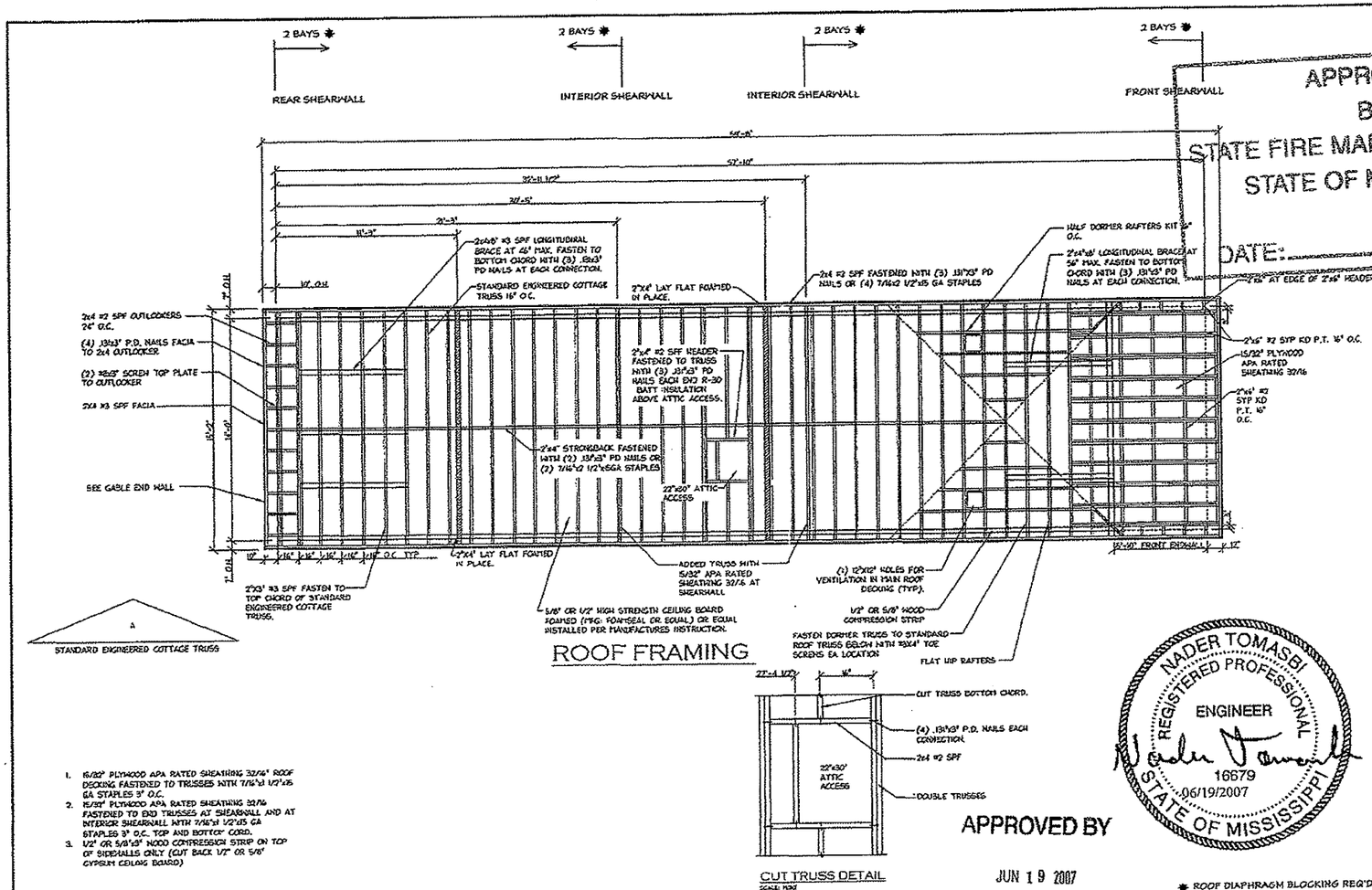

1. 15/32" PLYWOOD APA RATED SHEATHING 32/16" ROOF DECKING FASTENED TO TRUSSES WITH 7/16"x1 1/2"x15 GA STAPLES 3" O.C.
2. 15/32" PLYWOOD APA RATED SHEATHING 32/16 FASTENED TO END TRUSSES AT SHEARWALL AND AT INTERIOR SHEARWALL WITH 7/16"x1 1/2"x15 GA STAPLES 3" O.C. TOP AND BOTTOM CORD.
3. 1/2" OR 5/8"x3" WOOD COMPRESSION STRIP ON TOP OF SIDEWALLS ONLY (CUT BACK 1/2" OR 5/8" GYPSUM CEILING BOARD)

APPROVED BY
STATE FIRE MARSHAL'S OFFICE
STATE OF MISSISSIPPI
DATE: 6/19/07

NADER TOMASBI
REGISTERED PROFESSIONAL ENGINEER
16679
06/19/2007
STATE OF MISSISSIPPI

APPROVED BY
JUN 19 2007
NTA INC

* ROOF DIAPHRAGM BLOCKING REQ'D. BLOCK ROOF SHEATHING AT ALL EDGES IN TRUSS BAYS NOTED ABOVE. FASTEN SHEATHING TO BLOCKS AS SPECIFIED IN PAGES 1.A AND 1.B.
BLOCKS MAY BE 2X3 #3 SPF FASTENED TO TRUSSES WITH (2) 10d NAILS TOED.

STMS041307-22	Title: ROOF FRAMING ELEV. B OPTIONAL	dti ◆design◆tech◆inc◆	Drawn By: . Date: . / Revised By:. Date: .	Model No. 1458	Pg. 16

NADER TOMASBI
REGISTERED PROFESSIONAL
ENGINEER
16679
06/19/2007
STATE OF MISSISSIPPI

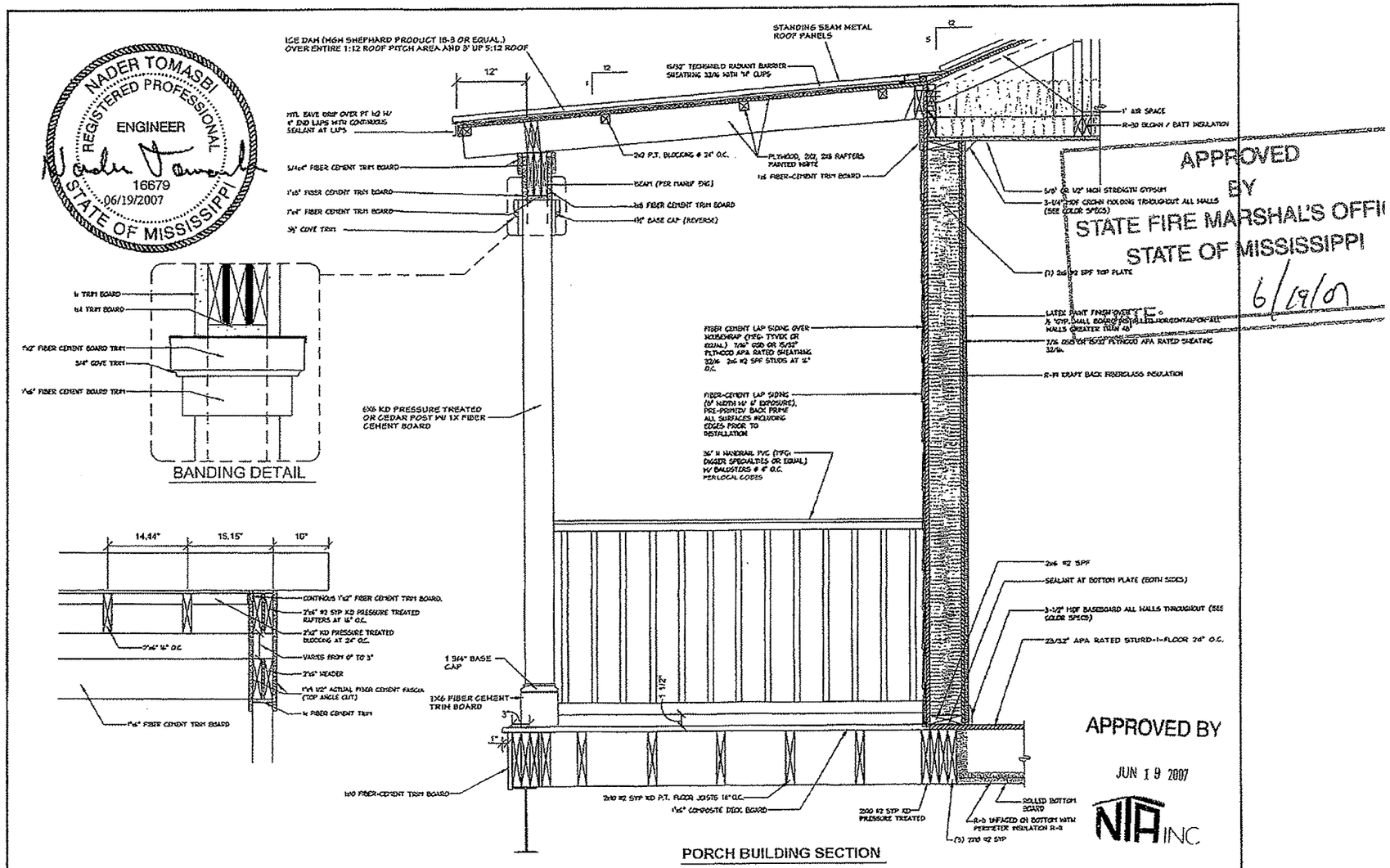

APPROVED BY
STATE FIRE MARSHAL'S OFFI
STATE OF MISSISSIPPI
6/19/07

APPROVED BY
JUN 19 2007
NIA INC

STMS041307-22	Title: **Porch Section** OPTIONAL	dti • design • tech • inc •	Drawn By: . Date: . / Revised By: . Date: .	Model No. **1458**	Pg. **17.A**

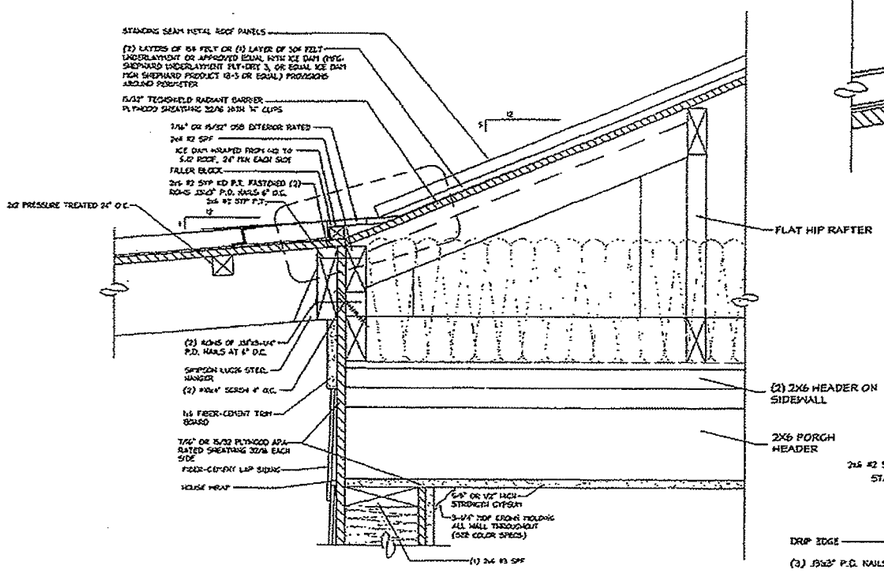

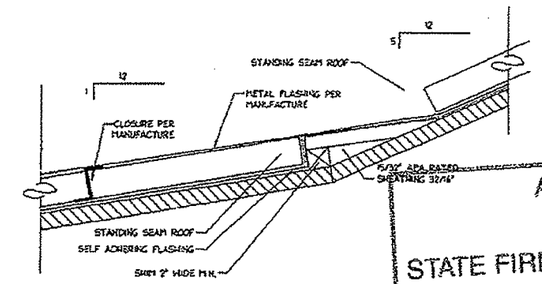

APPROVED
BY
STATE FIRE MARSHAL'S OFFICE
STATE OF MISSISSIPPI

STANDING SEAM ROOF DETAIL

DATE: 6/19/07

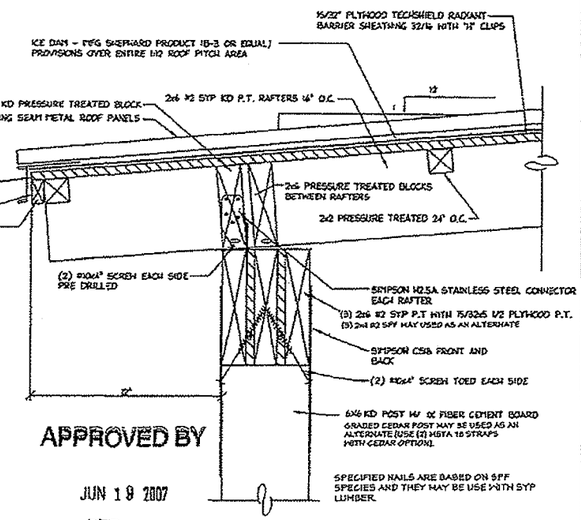

APPROVED BY

JUN 19 2007

NADER TOMASBI
REGISTERED PROFESSIONAL
ENGINEER
16679
06/19/2007
STATE OF MISSISSIPPI

NTA INC

FOR STRUCTURAL REFERENCE ONLY

STMS041307-22	Title: **Porch Details** OPTIONAL	dti • design-tech • inc •	Drawn By: . Date: . / Revised By:. Date: .	Model No. **1458**	Pg. **17.B**

APPROVED
BY
STATE FIRE MARSHAL'S OFFICE
STATE OF MISSISSIPPI
DATE: 6/19/07

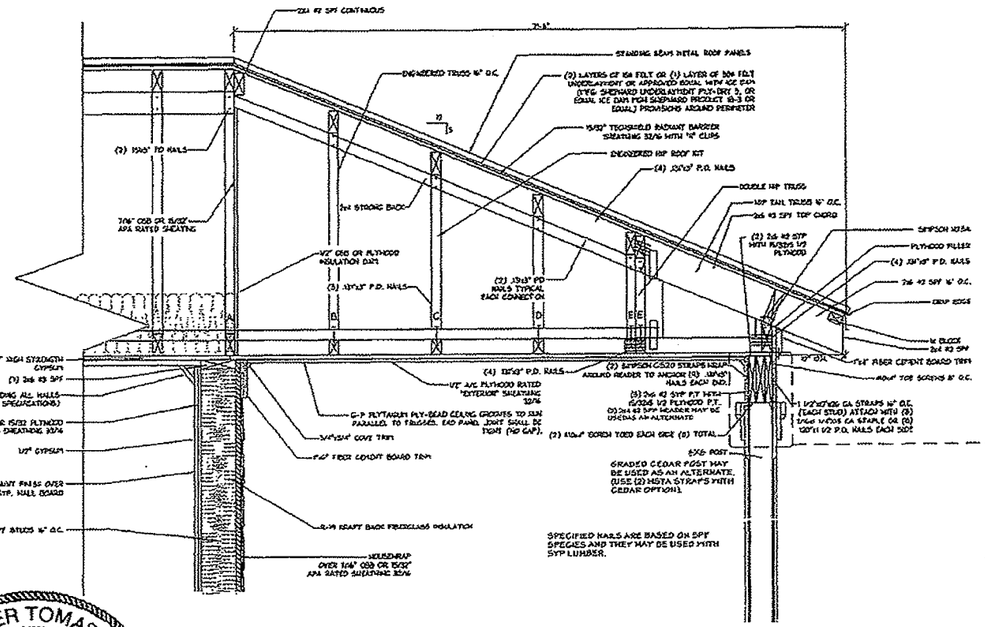

BANDING DETAIL

NADER TOMASBI
REGISTERED PROFESSIONAL
ENGINEER
16679
06/19/2007
STATE OF MISSISSIPPI

APPROVED BY
JUN 19 2007
NTA INC

STMS041307-22	Title: PORCH SECTION	dti design+tech+inc	Drawn By: . Date: . / Revised By: . Date: .	Model No. 1458	Pg. 17.C

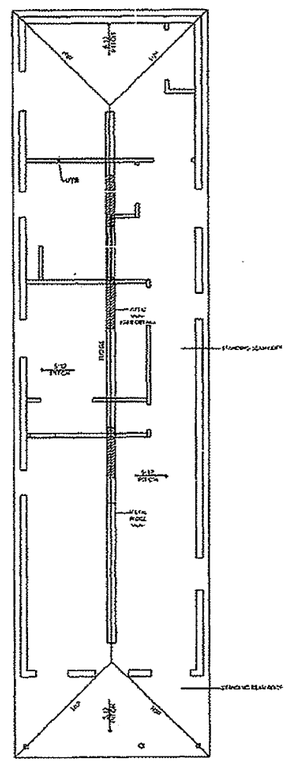

ROOF PLAN

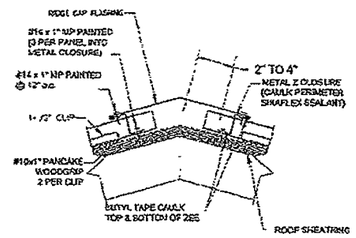

RIDGE / HIP DETAIL

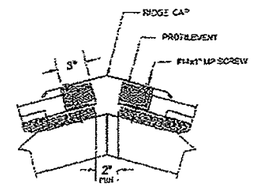

VENTED RIDGE DETAIL

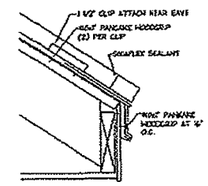

EAVE DETAIL

REQUIRED ATTIC VENTILATION: 2.8 sq. ft.

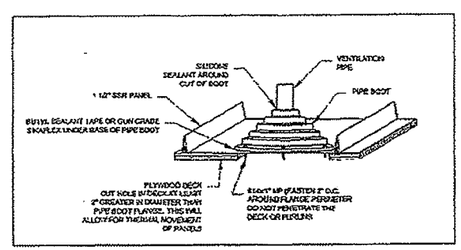

PIPE PENETRATION DETAIL

APPROVED BY STATE FIRE MARSHAL'S OFFICE STATE OF MISSISSIPPI
DATE: 6/19/07

APPROVED BY
JUN 19 2007
NTA INC

NOTE:
STANDING SEAM METAL ROOF SHALL COMPLY WITH ALL STRUCTURAL LOADS AS SHOWN ON THE DESIGN REQUIREMENTS OF THE 2003 INTERNATIONAL RESIDENTIAL CODE AND THE FEDERAL MANUFACTURED HOME CONSTRUCTION AND SAFETY STANDARDS.

NADER TOMASBI
REGISTERED PROFESSIONAL ENGINEER
16679
06/19/2007
STATE OF MISSISSIPPI

STMS041307-22	Title: METAL ROOF DETAILS	dti ◆design◆tech◆inc◆	Drawn By: . Date: . / Revised By: . Date: .	Model No. 1458	Pg. 18.A

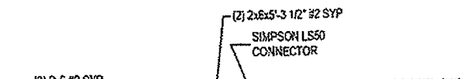

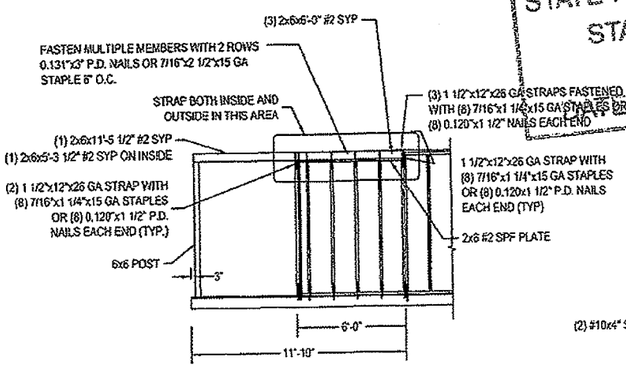

PORCH FRAMING DETAIL

SCALE: NONE

APPROVED BY STATE FIRE MARSHAL'S OFFICE STATE OF MISSISSIPPI 6/19/07

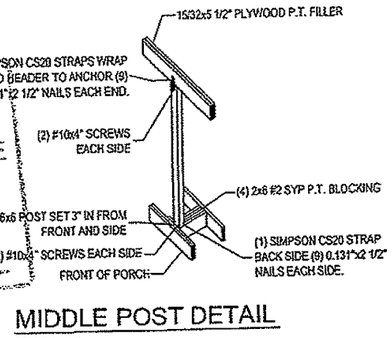

MIDDLE POST DETAIL

SCALE: NONE

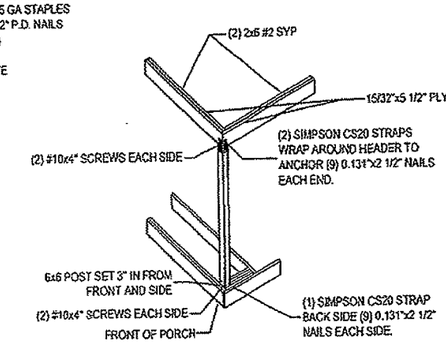

CORNER POST DETAIL

SCALE: NONE

APPROVED BY

JUN 19 2007

NTA INC

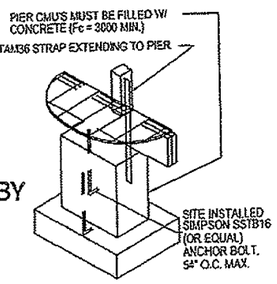

POST END DETAIL

APPLIES TO PERMANENT HOME SET

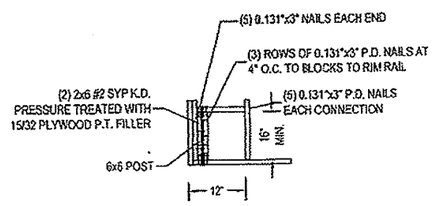

BLOCKING FOR POST CORNER DETAIL

SCALE: NONE

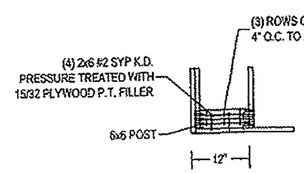

ALT. BLOCKING FOR POST CORNER DETAIL

SCALE: NONE

NADER TOMASBI REGISTERED PROFESSIONAL ENGINEER 16679 06/19/2007 STATE OF MISSISSIPPI

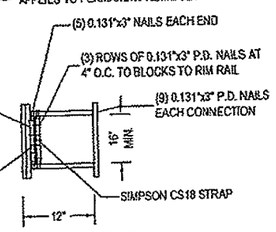

BLOCKING FOR POST MIDDLE DETAIL

SCALE: NONE

NOTE:
ALL PLYWOOD 15/32 APA RATED SHEATHING 32/16
ALL EXPOSED PLYWOOD PRESSURE TREATED

STMS041307-22	Title: Porch Framing Details	dti design • tech • inc	Drawn By: . Date: . Revised By: . Date: .	Model No. 1458	Pg. 19

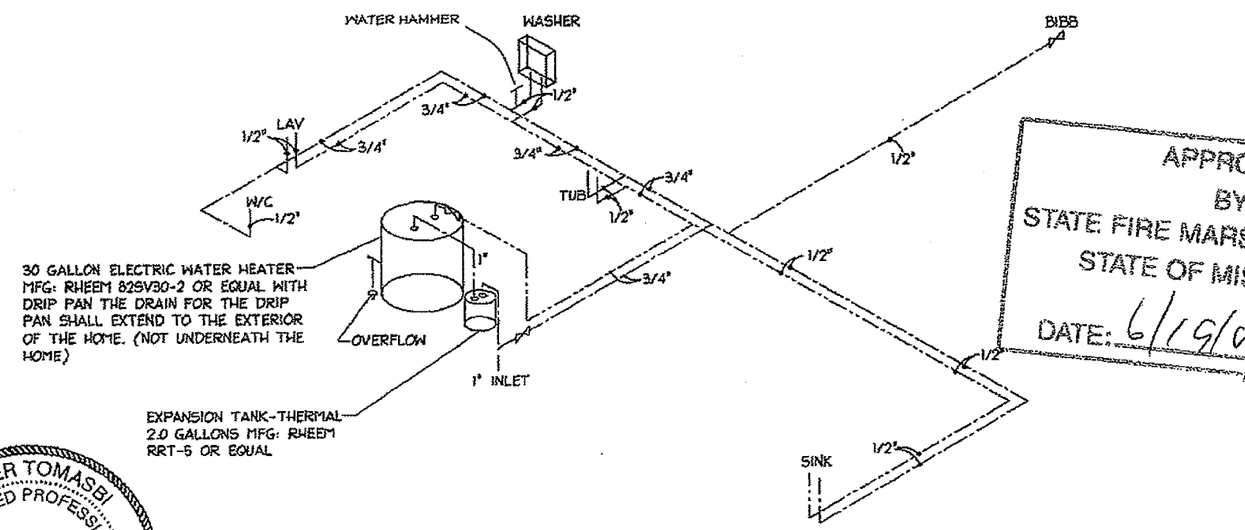

APPROVED
BY
STATE FIRE MARSHAL'S OFFICE
STATE OF MISSISSIPPI
DATE: 6/19/07

NADER TOMASBI
REGISTERED PROFESSIONAL
ENGINEER
16679
06/19/2007
STATE OF MISSISSIPPI

SYMBOLS:

— - - — HOT WATER LINE
— - - — COLD WATER LINE

NOTE:
LAV, WATER CLOSET AND SINK TO HAVE A SEPARATE SHUT-OFF VALVE ON BOTH HOT AND COLD WATER LINES.

ABBREVIATIONS:

WC	WATER CLOSET
LAV	LAVATORY
WASH	WASHER
BIBB	HOUSE BIBB
CW	COLD WATER
HW	HOT WATER
VTR	VENT THROUGH ROOF
CO	CLEAN OUT
BATH	BATH TUB
SINK	KITCHEN SINK

WATER SUPPLY

NOT TO SCALE

APPROVED BY
JUN 19 2007
NTA INC

OCEAN SPRINGS, PROVIDE AN EXPANSION TANK OR OTHER DEVICE DESIGNED FOR INTERMITTENT OPERATION FOR THERMAL EXPANSION CONTROL AT THE WATER HEATER IF A BACKFLOW PREVENTER IS ON OR TO BE INSTALLED ON THE WATER LINE OR AT THE METER.

LONG BEACH, PROVIDE A MANIFOLD WITH PROPER LABELING IF PEX TUBING AND FITTINGS ARE INSTALLED ON WATER SYSTEM. FUTHER, SUCH PEX TUBING AND FITTINGS SHALL BE INSTALLED IN ACCORDANCE WITH THE MANUFACTURER'S PUBLISHED INSTRUCTIONS, THE APPLICABLE CODES AND ANY ES REPOR REGARDING THE PARTICULAR PEX PRODUCT. WHERE DIFFERENCES EXIST, THE INSTRUCTIONS IN ANY ES REPORT PERTAINING TO THE APPLICABLE PEX PRODUCT SHALL GOVERN.

STMS041307-22	Title: WATER SUPPLY	dti • design • tech • inc •	Drawn By: . Date: . / Revised By: . Date: .	Model No. 1458	Pg. 20

APPROVED
BY
STATE FIRE MARSHAL'S OFFICE
STATE OF MISSISSIPPI
DATE: 6/19/07

DESIGNATION	PLUMBING FIXTURE SCHEDULE—UFAS			
	MANUFACTURER	MODEL NO.	COLOR	GENERAL NOTES
	MANSFIELD	#137	WHITE	TOILET BOWL
	MANSFIELD	#160	WHITE	TOILET TANK
	ODYSSEY	OP44218	WHITE	TOILET SEAT
	BANNER	766755	SATIN NICKEL	KIT FAUCET
	MOEN	4925BC	SATIN NICKEL	BATH FAUCET
	MOEN	T183BC	SATIN NICKEL	SHOWER TRIM KIT
	MOEN	62300	-	ANTI-SCALD VALVE
	AMERICAN STANDARD	0419L444	WHITE	CHINA VANITY SINK
	DAYTON	GE23321	SS	KITCHEN SINK

DESIGNATION	PLUMBING FIXTURE SCHEDULE			
	MANUFACTURER	MODEL NO.	COLOR	GENERAL NOTES
	MANSFIELD	#150	WHITE	TOILET BOWL
	MANSFIELD	#160	WHITE	TOILET TANK
	ODYSSEY	OP44218	WHITE	TOILET SEAT
	BANNER	766755	SATIN NICKEL	KIT FAUCET
	MOEN	4925BC	SATIN NICKEL	BATH FAUCET
	MOEN	T183BC	SATIN NICKEL	SHOWER TRIM KIT
	MOEN	62300	-	ANTI-SCALD VALVE
	ODYSSEY	2006857	WHITE	CHINA VANITY SINK
	ENEX	#3319-T8548	SS	KITCHEN SINK

DESIGNATION	ACCESSORY FIXTURE SCHEDULE			
	MANUFACTURER	MODEL NO.	COLOR	GENERAL NOTES
	AMERICAN PRIDE	#1124	WHITE	SURFACE MOUNTED MEDICINE CABINET
	ODYSSEY	14584-SN	BRUSHED N	TOWEL BAR
	ODYSSEY	14586-SN	BRUSHED N	TISSUE HOLDER

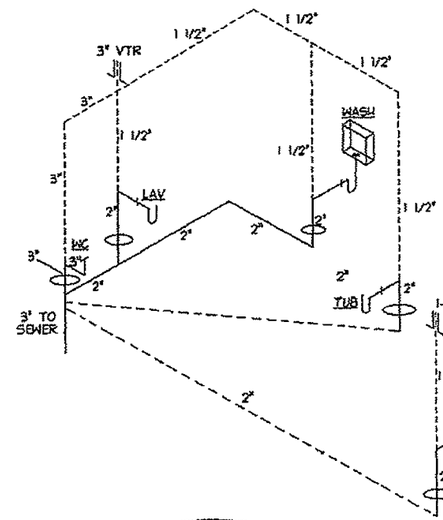

1-1/2" VTR
AUTO AIR ADMITTANCE VALVE OPTIONAL

SINK

APPROVED
BY
STATE FIRE MARSHAL'S OFFICE
STATE OF MISSISSIPPI
DATE: 6/19/07

APPROVED BY
JUN 19 2007

NTA INC

NADER TOMASBI
REGISTERED PROFESSIONAL ENGINEER
16679
06/19/2007
STATE OF MISSISSIPPI

DWV LEGEND

- DRAIN/WASTE PIPING
- VENT PIPING
- = DROPS TO BE FIELD CONNECTED

DRAIN WASTE VENT

NOT TO SCALE

PLUMBING NOTES:

1. ALL PLUMBING FIXTURES SHALL HAVE SEPARATE SHUT-OFF VALVES.
2. WATER HEATER SHALL HAVE SAFETY PAN WITH 3/4" DRAIN TO EXTERIOR, T & P RELIEF VALVE WITH DRAIN TO EXTERIOR, AND A SHUT OFF VALVE WITHIN 3 FEET ON A COLD WATER SUPPLY LINE.
3. WATER PIPES INSTALLED IN A WALL EXPOSED TO THE EXTERIOR SHALL BE LOCATED ON THE HEATED SIDE OF THE WALL INSULATION. WATER PIPING INSTALLED IN AN UNCONDITIONED ATTIC SHALL BE INSULATED WITH AN INSULATION OF R-6.5 MINIMUM.
4. DWV SYSTEM SHALL BE ABS OR PVC - SCHEDULE 40
5. WATER SUPPLY LINES SHALL BE CPVC OR PEX. PIPE SHALL BE INSTALLED IN ACCORDANCE WITH THE MANUFACTURERS LIMITATIONS AND INSTRUCTIONS.
6. BUILDING DRAIN AND CLEANOUTS ARE DESIGNED AND SITE INSTALLED BY OTHERS, SUBJECT TO LOCAL JURISDICTION APPROVAL.
7. TUB ACCESS PROVIDED UNDER HOME, UNLESS OTHERWISE NOTED.
8. SHOWER STALLS SHALL BE COVERED WITH NON-ABSORBENT MATERIAL TO A HEIGHT OF 72" ABOVE FINISH FLOOR.
9. PROVIDE THERMAL EXPANSION DEVICE IF REQUIRED BY WATER HEATER MANUFACTURER OR SYSTEM INSTALLATION ON SITE BY OTHERS.
10. THE MINIMUM SIZE WATER SERVICE PIPE SHALL BE 3/4".
11. THERMAL EXPANSION TANK REQUIRED AT WATER HEATER.
12. ALL PENETRATIONS IN FLOORS FOR PIPING MUST BE CAULKED OR FOAMED.

STMS041307-22	Title: DWV SYSTEM	dti design-tech-inc	Drawn By: . Date: . / Revised By: . Date: .	Model No. 1458	Pg. 21

SYMBOLS X = CIRCUIT NUMBER

- 15A RECEPT
- CEILING LIGHT
- SINGLE SWITCH
- THERMOSTAT
- AC/DC SMOKE ALARM, ALL TO BE INTERCONNECTED PER MANUFACTURER'S INSTRUCTIONS AND ALL APPLICABLE CODES
- MECHANICAL FAN
- WALL MOUNTED LIGHT
- 3-WAY SWITCH
- SWITCH RUN
- 20A RECEPT
- * GFCI PROTECTED
- DOUBLE SWITCH
- TV JACK
- COMBINATION SMOKE ALARM AND CARBON MONOXIDE ALARM, TO BE INTERCONNECTED PER MANUFACTURER'S INSTRUCTIONS AND ALL APPLICABLE CODES
- J - J-BOX FOR ELECTRICAL CONNECTION
- PHONE JACK
- HVAC UNIT

0 1' 2' 5' 10'
SCALE BAR

APPROVED
BY
STATE FIRE MARSHAL'S OFFICE
STATE OF MISSISSIPPI
DATE: 6/19/07

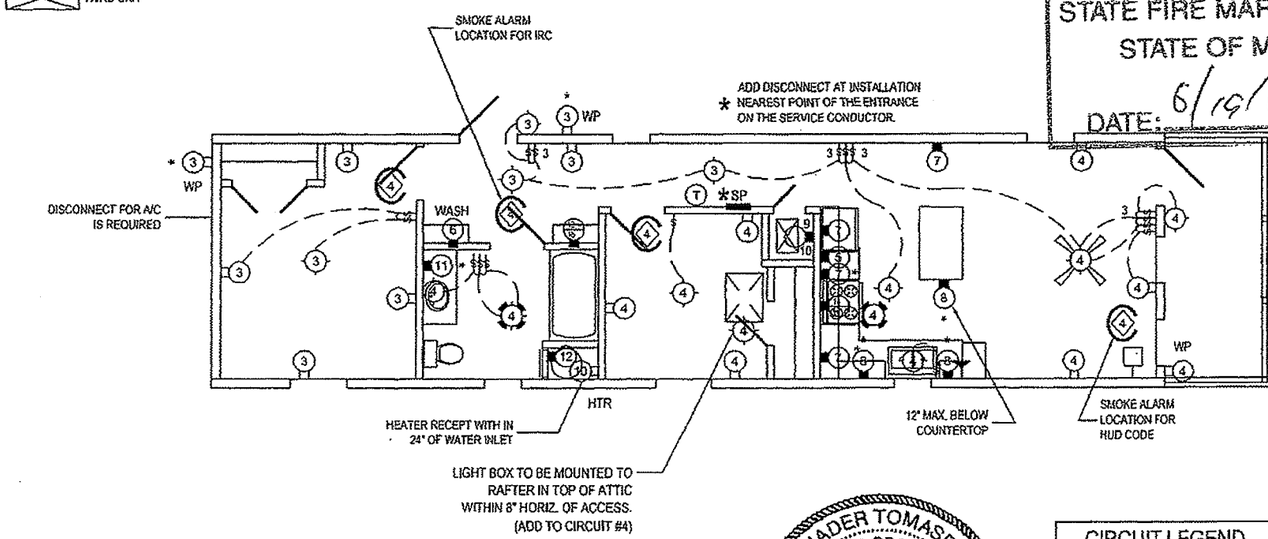

APPROVED BY
JUN 19 2007
NIA INC

SERVICE SIZE
125 AMPERE

NOTE:
ALL HOMES ARE BUILT TO MEET THE 2005 NATIONAL ELECTRICAL CODE

NOTES:

ALL SMOKE ALARMS W/ BATTERY BACK-UP TO BE INTERCONNECTED WITH A 14 GAUGE MIN. INTERCONNECTION WIRE OR EQUIVALENT PER MANUFACTURER'S RECOMMENDATIONS.

ϕϕϕ -BRKR./WIRE SIZES TO BE DETERMINED AND SUPPLIED ON-SITE BY OTHERS.

ALL BRANCH CIRCUITS SUPPLYING 15A AND 20A OUTLETS IN BEDROOMS ARE PROTECTED BY AN ARC-FAULT CIRCUIT INTERRUPTER IN ACCORDANCE WITH SECTION 210.12 OF THE NEC.

NADER TOMASBI
REGISTERED PROFESSIONAL ENGINEER
16679
06/19/2007
STATE OF MISSISSIPPI

22"X30" ATTIC ACCESS REQUIRED WHEN CLEAR HEIGHT OF ATTIC EXCEEDS 30".

CIRCUIT LEGEND

CIRCUIT No.	DESCRIPTION	WIRE SIZE	BREAKER SIZE
1	GENERAL LIGHTING	14-2 W/GR.	15A-S. POLE
2	GENERAL LIGHTING	14-2 W/GR.	15A-S. POLE
3	GENERAL LIGHTING	14-2 W/GR.	15A-S. POLE
4	GENERAL LIGHTING	14-2 W/GR.	15A-S. POLE
5	MICROWAVE	12-2 W/GR.	20A-S. POLE
6	WASHER RECEPT	12-2 W/GR.	20A-S. POLE
7	APPLIANCE CIRCUIT	12-2 W/GR.	20A-S. POLE
8	APPLIANCE CIRCUIT	12-2 W/GR.	20A-S. POLE
9	HVAC SYSTEM INSTALLED PER MANUFACTURERS SPECS OR DESIGNED/INSTALLED BY OTHERS		
10			
11	BATH RECEPT CIRCUIT	12-2 W/GR.	20A-S. POLE
12	WATER HEATER	10-2 W/GR.	25A-S. POLE
13,15	ELECTRIC DRYER	10-3 W/GR.	30A-D. POLE
14,16	ELECTRIC RANGE	8-3 W/GR.	40A-D. POLE

STMS041307-22	Title: Electrical Plan	dti design-tech-inc	Drawn By: . Date: . Revised By: . Date: .	Model No. 1458	Pg. 22.A

APPROVED BY STATE FIRE MARSHAL'S OFFICE STATE OF MISSISSIPPI DATE: 6/19/07

1458

ELECTRICAL LOAD CALCULATIONS

COMPUTE GENERAL PURPOSE LOAD - 2005 NEC

L 14 FT. x 58 FT. x 3 W / SQ.FT.= 2.44 KVA
2.44 KVA / 120 VOLTS = 20.33 AMPS
20.33 AMPS / 15 AMPS = 1.00 CIRCUITS

MINIMUM NUMBER OF CIRCUITS REQUIRED:

2 - GENERAL PURPOSE @ 15 AMPS
2 - SMALL APPLIANCE @ 20 AMPS
1 - LAUNDRY @ 20 AMPS

COMPUTE MINIMUM FEEDER:

GENERAL LIGHTING.....	2.44	KVA
SMALL APPLIANCE.....	3	KVA
LAUNDRY.....	1.5	KVA
RANGE.....	9.7	KVA
WATER HEATER.....	4.5	KVA
DRYER.....	5.3	KVA
FURNACE(GAS/OIL).....	1.3	KVA
VENT FANS(4 TL.).....	0.3	KVA
MICROWAVE OVEN.....	1.5	KVA
DISHWASHER.....	0	KVA
GARBAGE DISPOSAL.....	0	KVA
TOTAL.....	29.54	KVA

NADER TOMASBI REGISTERED PROFESSIONAL ENGINEER 16679 06/19/2007 STATE OF MISSISSIPPI

10 KVA @ 100% = 10 KVA
29.54 KVA - 10 KVA = 19.54 KVA @ 40% = 7.82 KVA
10 KVA + 7.82 KVA = 17.82 KVA / 240 VOLTS = **74.25 AMPS**
MINIMUM ENTRANCE TO BE: **100** AMPERE SERVICE

OPT. CENTRAL ELECTRIC SPACE HEATING IN PLACE OF GAS/OIL

0 KVA ELECTRIC FURNACE @ 65%= 0 KVA
17.30 KVA + 0 KVA = 17.30 KVA / 240 VOLTS= **72.07 AMPS**
MINIMUM ENTRANCE TO BE: **100** AMPERE SERVICE

OPT. AIR CONDITIONER 4.2 KVA
17.82 KVA + 4.2 KVA = 22.02 KVA / 240 VOLTS= **91.75 AMPS**
MINIMUM ENTRANCE TO BE: **100** AMPERE SERVICE

COMPUTE NEUTRAL LOAD 2005 NEC

GENERAL LIGHTING + SMALL APPLIANCE = 6.94 KVA
FIRST 3.0 KVA @ 100% = 3 KVA
6.94 KVA - 3.0 KVA = 3.94 KVA x 35% = 1.38 KVA
NET TOTAL = 3 KVA + 1.38 KVA = 4.38 KVA

RANGE @70%.....	6.79	KVA
DRYER @70%.....	3.71	KVA
DISHWASHER.....	0	KVA
FURNACE.....	1.3	KVA
MICROWAVE OVEN.....	1.5	KVA
FANS.....	0.3	KVA
GARBAGE DISPOSAL.....	0	KVA

TOTAL = 17.98 KVA / 240 VOLTS= **74.91 AMPS**

APPROVED BY

JUN 19 2007

NTA INC

APPROVED
BY
STATE FIRE MARSHAL'S OFFICE
STATE OF MISSISSIPPI
DATE 6/19/07

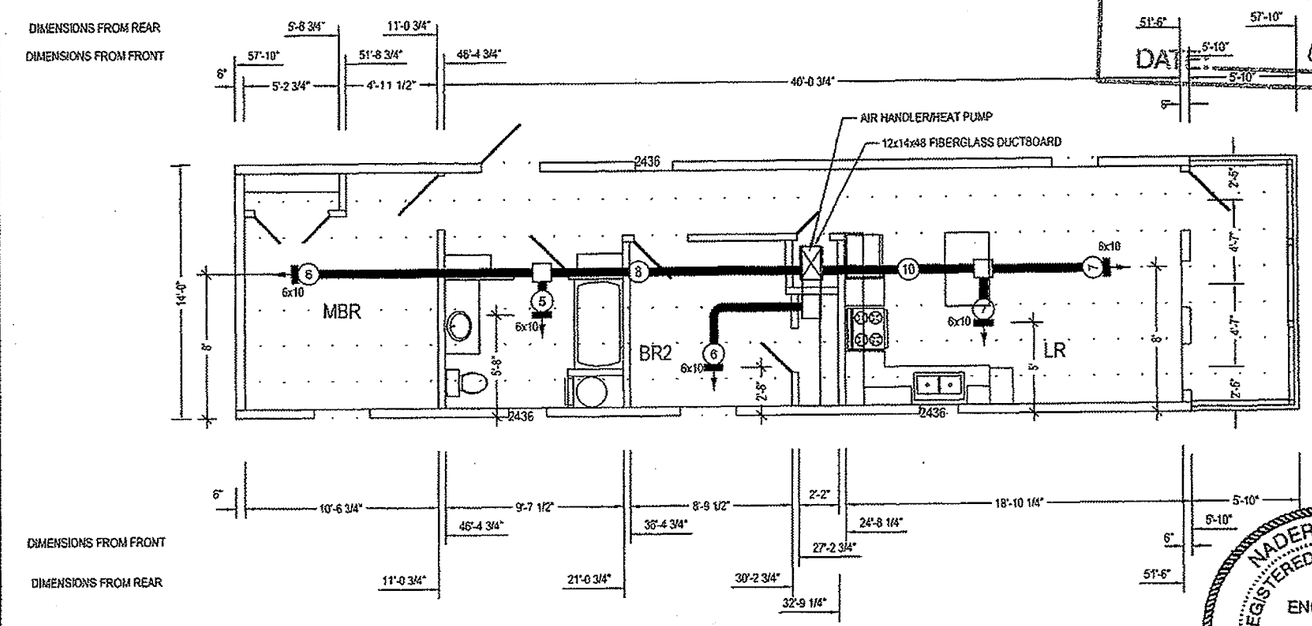

APPROVED BY
JUN 19 2007
NTA INC

NADER TOMASBI
REGISTERED PROFESSIONAL
ENGINEER
16679
06/19/2007
STATE OF MISSISSIPPI

MECHANICAL NOTES AND LEGEND

1. AIR SUPPLY DUCTS SHALL BE INSULATED WITH A MINIMUM R-6 * INSULATION.
2. BEDROOM DOORS SHALL BE UNDERCUT 2-1/2"
3. REGISTERS AND GRILLES SHALL COMPLY WITH THE REQUIREMENTS OF UL181-1996 REVISIONS (CLASS 1 OR 2 DUCTS)
4. FURNACE COMPARTMENT DOOR SHALL HAVE A RETURN AIR GRILL SIZED PER FURNACE MAUNUFACTURER REQUIREMENTS.

(6) = FLOW DIRECTION, REGISTER, AND FLEX DUCT DIAMETER.

* OPTIONAL PER 2003 IRC ENERGY CODE. USE R-8 AFTER JAN. 2008 OR WHEN BUILT TO 2006 IRC.

STMS041307-22	Title: HVAC/Exhaust Fan Duct Plan	dti • design • tech • inc	Drawn By: . Date: . / Revised By: . Date: .	Model No. 1458	Pg. 23.A

APPROVED BY STATE MARSHAL'S OFFICE STATE OF MISSISSIPPI 6/19/07

Short Form
Entire House
Healthy Homes of Louisiana, llc

Job:
Date:
By:

PO Drawer 3127, West Monroe, La 71294 Phone: 318-355-1918 Fax: 318-397-2123 Email: bobby@parksmobileair.com Web: www.ParksMobileAir.com

Project Information

For: 1B-A

Design Information

	Htg	Clg
Outside db (°F)	35	95
Inside db (°F)	70	75
Design TD (°F)	35	20
Daily range	-	L
Inside humidity (%)	-	50
Moisture difference (gr/lb)	-	53

Infiltration	
Method	Simplified
Construction quality	Average
Fireplaces	

NADER TOMASBI REGISTERED PROFESSIONAL ENGINEER 16679 06/19/2007 STATE OF MISSISSIPPI

HEATING EQUIPMENT

Make		
Trade		
Model		
Efficiency	80 AFUE	
Heating input	0	Btuh
Heating output	0	Btuh
Temperature rise	0	°F
Actual air flow	422	cfm
Air flow factor	0.049	cfm/Btuh
Static pressure	0.30	in H2O
Space thermostat		

COOLING EQUIPMENT

Make		
Trade		
Cond		
Coil		
Efficiency	0 EER	
Sensible cooling	0	Btuh
Latent cooling	0	Btuh
Total cooling	0	Btuh
Actual air flow	422	cfm
Air flow factor	0.045	cfm/Btuh
Static pressure	0.30	in H2O
Load sensible heat ratio	0.77	

ROOM NAME	Area (ft²)	Htg load (Btuh)	Clg load (Btuh)	Htg AVF (cfm)	Clg AVF (cfm)
MST BR	158	2220	2413	109	110
BTH	106	1163	779	57	35
BR2	127	1584	1930	78	88
KT	132	1381	2447	68	111
LR	132	2260	1716	111	78
HALL	77	0	0	0	0
Entire House	731	8608	9285	422	422
Other equip loads		1108	633		
Equip. @ 1.00 RSM			9918		
Latent cooling			3032		
TOTALS	731	9715	12950	422	422

APPROVED BY

JUN 19 2007

NIA INC.

wrightsoft Version 6

Duct System Summary
Entire House
Healthy Homes of Louisiana, llc

Job:
Date:
By:

PO Drawer 3127, West Monroe, La 71294 Phone: 318-355-1918 Fax: 318-397-2123 Email: bobby@parksmobileair.com Web: www.ParksMobileAir.com

APPROVED BY
STATE FIRE MARSHAL'S OFFICE
MISSISSIPPI
DATE 6/19/07

Project Information

For: 1B-A

	Heating		Cooling	
External static pressure	*0.30*	in H2O	*0.30*	in H2O
Pressure losses	0.00	in H2O	0.00	in H2O
Available static pressure	0.30	in H2O	0.30	in H2O
Supply / return available pressure	0.27 / 0.03	in H2O	0.27 / 0.03	in H2O
Lowest friction rate	0.109	in/100ft	0.109	in/100ft
Actual air flow	422	cfm	422	cfm
Total effective length (TEL)	276	ft		

Supply Branch Detail Table

Name		Design (Btuh)	Htg (cfm)	Clg (cfm)	Design FR	Diam (in)	Rect Size (in)	Duct Matl	Actual Ln (ft)	Ftg.Eqv Ln (ft)	Trunk
MST BR	c	2413	109	110	0.165	6	0x0	VIFx	16.6	145.0	st1
BTH	h	1163	57	35	0.167	5	0x0	VIFx	11.2	147.7	st1
BR2	c	1930	78	88	0.169	6	0x0	VIFx	9.0	148.5	st2
KT	c	2447	68	111	0.110	7	0x0	VIFx	19.3	223.2	st2
LR	h	2260	111	78	0.109	7	0x0	VIFx	24.7	220.0	st2

Supply Trunk Detail Table

Name	Trunk Type	Htg (cfm)	Clg (cfm)	Design FR	Veloc (fpm)	Diam (in)	Rect Duct Size (in)	Duct Material	Trunk
st1	Peak AVF	166	145	0.165	475	8	0 x 0	VinlFlx	
st2	Peak AVF	256	277	0.109	508	10	0 x 0	VinlFlx	

Return Branch Detail Table

Name	Grill Size (in)	Htg (cfm)	Clg (cfm)	TEL (ft)	Design FR	Veloc (fpm)	Diam (in)	RectSize (in)	Stud/Joist Opening (in)	Duct Matl	Trunk
rb1	0x0	422	422	31.2	0.109	537	12	0x 0		ShMt	

APPROVED BY
JUN 19 2007
NIA INC

NADER TOMASBI
REGISTERED PROFESSIONAL
ENGINEER
16679
06/19/2007
STATE OF MISSISSIPPI

APPROVED
BY
STATE FIRE MARSHAL'S OFFICE
STATE OF MISSISSIPPI
DATE 6/19/07

Permit #
Permit Date

RES*check* Software Version 3.7.3

Compliance Certificate

Project Title: 1458
Report Date: 06/10/07

Energy Code: **2003 IECC**
Location: **Columbus, Mississippi**
Construction Type: **Single Family**
Glazing Area Percentage: **8%**
Heating Degree Days: **2908**

Construction Site: Owner/Agent: Designer/Contractor:

Compliance: **Invalid SHGC(s)** Maximum UA: Your Home UA: -->

Assembly	Gross Area or Perimeter	Cavity R-Value	Cont. R-Value	Glazing or Door U-Factor	UA
Ceiling 1: Flat Ceiling or Scissor Truss:	812	30.0	1.0		28
Sidewall Hallside: Wood Frame, 16" o.c.:	416	19.0	1.0		23
Window 1: Vinyl Frame:Double Pane with Low-E: SHGC: 0.00	19			0.390	7
Door 1: Solid:	21			0.350	7
Sidewall Kit. Side: Wood Frame, 16" o.c.:	416	19.0	1.0		22
Window 2: Vinyl Frame:Double Pane with Low-E: SHGC: 0.00	42			0.390	16
Front Endwall: Wood Frame, 16" o.c.:	112	19.0	1.0		4
Window 3: Vinyl Frame:Double Pane with Low-E: SHGC: 0.00	25			0.390	10
Door 2: Solid:	21			0.350	7
Rear Sidewall: Wood Frame, 16" o.c.:	112	19.0	1.0		7
Floor 1: All-Wood Joist/Truss:Over Unconditioned Space:	812	11.0	1.0		54
Electric: Forced Hot Air: 100 AFUE					

NADER TOMASBI
REGISTERED PROFESSIONAL
ENGINEER
16679
06/19/2007
STATE OF MISSISSIPPI

APPROVED BY

JUN 19 2007

NIA INC

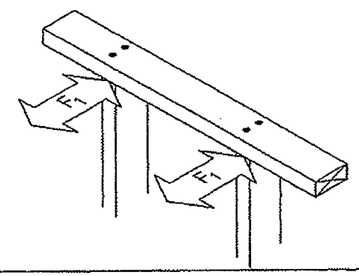

NADER TOMASBI
REGISTERED PROFESSIONAL
ENGINEER
16679
06/19/2007
STATE OF MISSISSIPPI

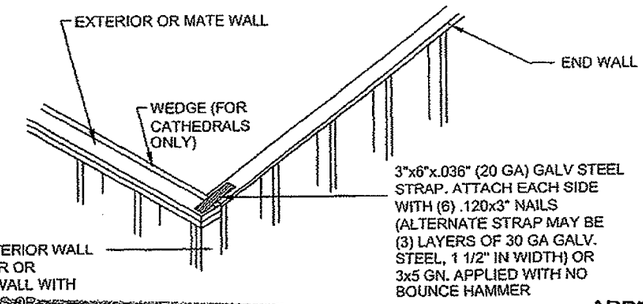

CONNECTION		
PARAMETERS	FASTENER (MINIMUM LENGTH AND DIAMETER OR STAPLE SIZE)	QUANTITY PER CONNECTION OR SPACING
		168" FLOOR
STUD SPACING = 16" O.C.	3"x0.131" P.D. NAIL	3
	2 1/2"x15 GA. STAPLE	4

EXTERIOR WALL OR MATE WALL

SCALE: NONE

APPROVED BY

JUN 19 2007

NTA INC.

APPROVED BY
STATE FIRE MARSHAL'S OFFICE
STATE OF MISSISSIPPI
DATE: 6/19/07

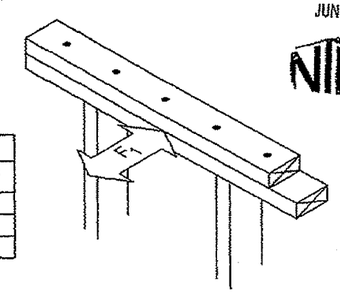

CONNECTION		
PARAMETERS	FASTENER (MINIMUM LENGTH AND DIAMETER OR STAPLE SIZE)	QUANTITY PER CONNECTION OR SPACING
		168" FLOOR
	3"x0.131" P.D. NAIL	6" O.C.
	2 1/2"x15 GA. STAPLE	4" O.C.

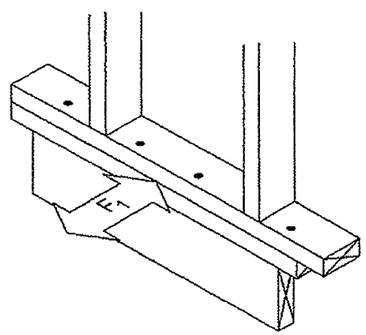

CONNECTION		
PARAMETERS	FASTENER (MINIMUM LENGTH AND DIAMETER OR STAPLE SIZE)	QUANTITY PER CONNECTION OR SPACING
		168" FLOOR
STUD SPACING = 16" O.C.	#8x3" SCREW	3 PER BAY
	3"x0.131" P.D. NAIL	3 PER BAY
	2 1/2"x15 GA. STAPLE	4 PER BAY

CONNECTION	PARAMETERS		QUANTITY PER CONNECTION OR SPACING
CORNER STUDS SIDEWALL/ENDWALL INTERSECTION 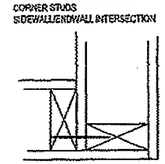	ALL LOCATIONS	3"x0.131" P.D. NAIL	16" O.C.
		2 1/2"x15 GA. STAPLE	10" O.C.
			SEE SHEARWALL DETAILS
DOUBLE STUDS OR JACK TO JAMB STUDS 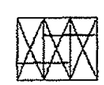	ALL LOCATIONS	3"x0.131" P.D. NAIL	8" O.C.
		2 1/2"x15 GA. STAPLE	5" O.C.

STMS041307-22	Title: Connection Details	dti design-tech-inc	Drawn By: . Date: . Revised By: . Date: .	Model No. 1458	Pg. 24.A

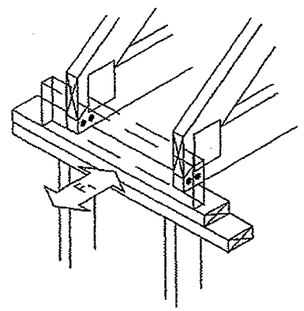

NADER TOMASBI
REGISTERED PROFESSIONAL
ENGINEER
16679
06/19/2007
STATE OF MISSISSIPPI

ALTERNATE CONNECTION		
PARAMETERS	FASTENER (MINIMUM LENGTH AND DIAMETER OR STAPLE SIZE)	QUANTITY PER CONNECTION OR SPACING
		168" FLOOR
TRUSS SPACING = 16" O.C.	#10x4" SCREW	1 EACH SIDE OF TRUSS TO TOP PLATE
	#10x4" SCREW	FROM RAIL TO TOP PLATE, EVERY 8"

APPROVED
BY
STATE FIRE MARSHAL'S OFFICE
STATE OF MISSISSIPPI
DATE: 6/19/07

CONNECTION		
PARAMETERS	FASTENER (MINIMUM LENGTH AND DIAMETER OR STAPLE SIZE)	QUANTITY PER CONNECTION OR SPACING
		168" FLOOR
TRUSS SPACING = 16" O.C.	3"x0.131" P.D. NAIL	3
	#10x4" SCREW	2 AT INTERIOR & 3 WITHIN 3' OF CORNERS

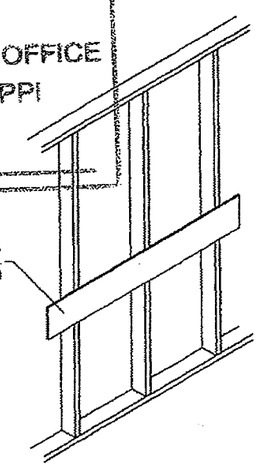

BELTRAIL DETAIL

OPTIONAL: BELTRAIL MAY BE 1X3 WITH DADO IN STUDS

APPROVED BY
JUN 19 2007
NTA INC

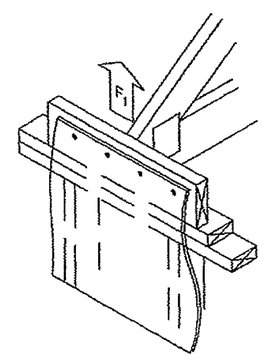

CONNECTION		
PARAMETERS	FASTENER (MINIMUM LENGTH AND DIAMETER OR STAPLE SIZE)	QUANTITY PER CONNECTION OR SPACING
		168" FLOOR
SHEATHING TYPE: 15/32" APA RATED PLYWOOD OR OSB	3"x0.131" P.D. NAIL	2" O.C.
	1 1/2"x15 GA. STAPLE	2" O.C.
	1 1/2"x16 GA. STAPLE	2" O.C.

STMS041307-22	Title: Connection Details	dti design·tech·inc	Drawn By: . Date: . Revised By: . Date: .	Model No. 1458	Pg. 24.B

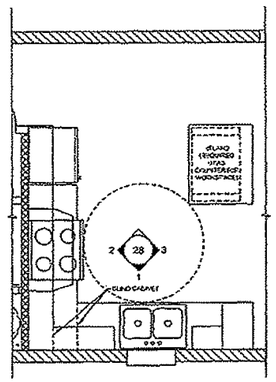

PLAN
KITCHEN

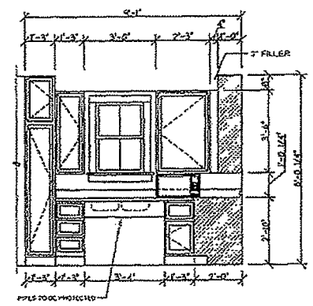

ELEVATION
KITCHEN

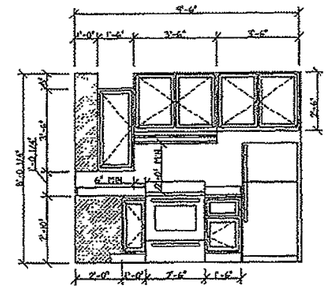

ELEVATION
KITCHEN

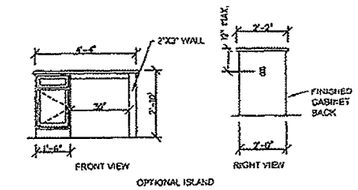

ELEVATION
KITCHEN

NADER TOMASBI
REGISTERED PROFESSIONAL
ENGINEER
16679
06/19/2007
STATE OF MISSISSIPPI

APPROVED
BY
STATE FIRE MARSHAL'S OFFICE
STATE OF MISSISSIPPI
DATE: 6/19/9

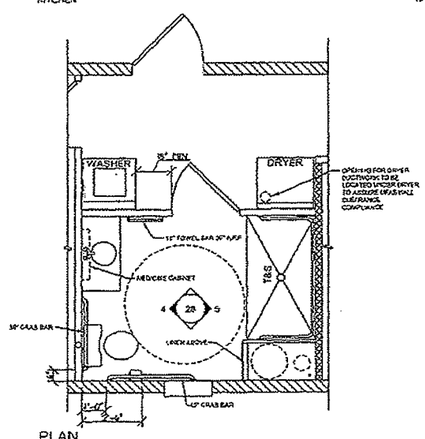

PLAN
BATH

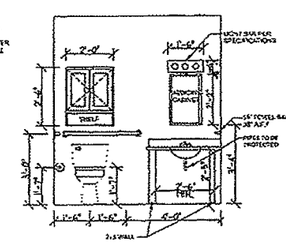

ELEVATION
BATH

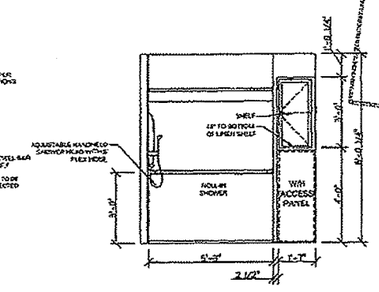

ELEVATION
BATH

APPROVED BY
JUN 19 2007
NIA INC

STMS041307-22	Title: CABINET DETAILS	dti design·tech·inc	Drawn By: . Date: . / Revised By: . Date: .	Model No. 1458	Pg. 25

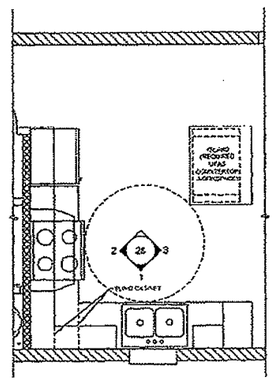

PLAN
KITCHEN

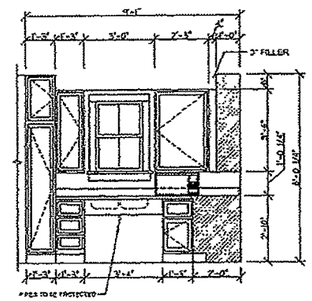

ELEVATION
KITCHEN

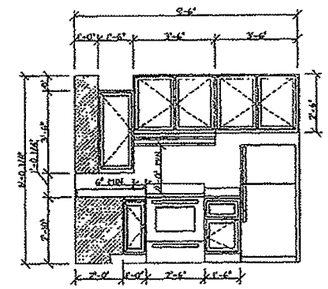

ELEVATION
KITCHEN

NADER TOMASBI
REGISTERED PROFESSIONAL
ENGINEER
16679
06/19/2007
STATE OF MISSISSIPPI

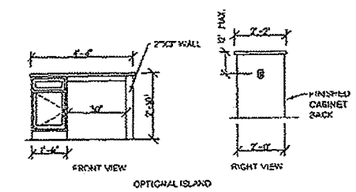

ELEVATION
KITCHEN

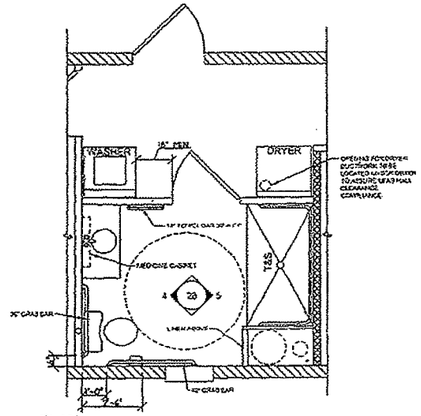

PLAN
BATH

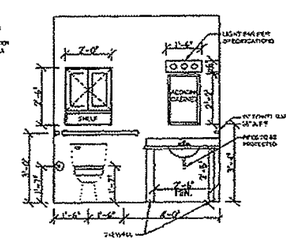

ELEVATION
BATH

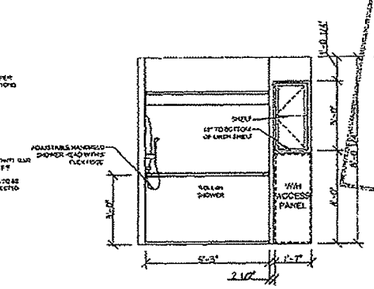

ELEVATION
BATH

APPROVED
BY
STATE FIRE MARSHAL'S OFFICE
STATE OF MISSISSIPPI
DATE: 6/19/07
APPROVED BY

JUN 19 2007

NTA INC

STMS041307-22	Title: CABINET DETAILS - UFAS	dti ◆design◆tech◆inc◆	Drawn By: . Date: . / Revised By: . Date: .	Model No. 1458	Pg. 26