STATE OF MISSISSIPPI

GEORGE DALE
Commissioner of Insurance
State Fire Marshal

LEE HARRELL
Deputy Commissioner of Insurance

RICKY DAVIS
State Chief Deputy Fire Marshal

LARRY BARR
State Fire Coordinator

DEPARTMENT OF INSURANCE
OFFICE OF THE FIRE MARSHAL
501 N. WEST STREET • 1001 WOOLFOLK BUILDING
JACKSON, MISSISSIPPI 39201
firemarshal@mid.state.ms.us
Website: www.doi.state.ms.us

Post Office Box 79 (39205)
Jackson, Mississippi
State Fire Marshal's Office
(601) 359-1061
1-888-648-0877
Fax: (601) 359-1076
State Fire Coordinator
(601) 359-1062

August 13, 2007

Mr. David J. Barts
Account Manager
NTA, Inc.
305 North Oakland Avenue/P. O. Box 490
Nappanese, Indiana 46550

Re: Plan Review – Hart Housing Group
Model Name – 1240-V2

Dear Mr. Barts:

Eugene Humphrey, Assistant State Chief Deputy Fire Marshal has requested that I contact you in regards to the above referenced project.

The State Fire Marshal's Office evaluation of the plans using the codes checked below found said plans **in** compliance and is therefore **approved** as submitted to this office.

(X) International Residential Code Ed. 2003
(X) International Building Code Ed. 2003
(X) National Electrical Code Ed. 2005
( ) NFPA Standard _____
(X) Other ASCE7-02

If you should have any questions or concerns, please do not hesitate to contact our office.

Sincerely,

Medgar Gibbs, Deputy State Fire Marshal I

MG:sh

cc: Ricky Davis, Chief, State Deputy Fire Marshal

R:/SHARE/PLANREVIEW00/DAVIDBARTS.NTA.HARTHOUSING.MODEL1240V2.0807.DOC

Hart Housing

1025 WATERFORD WAKARUSA IN 46573

1240 - V2

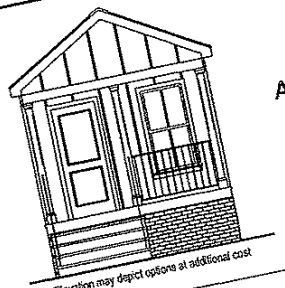

Elevation may depict options at additional cost

APPROVED BY

AUG 9 - 2007

NIA INC

Design Codes: (Mississippi)

2006 IBC/IRC, 2005 NEC
MISSISSIPPI MODULAR APPROVAL ANSI A119.5
PARK MODEL APPROVAL
FLOOR LIVE LOAD: 40 PSF
FLOOR DEAD LOAD: 10 PSF
GROUND SNOW LOAD: 30 PSF
WIND LOAD:
A. 150 MPH AT 3 SECOND GUST. EXPOSURE B
B. Iw = 1.0 WIND IMPORTANCE FACTOR
C. B WIND EXPOSURE CATEGORY.
D. GCpi = +/- 0.18 INTERNAL PRESSURE COEFFICIENT.
E1. Pw = 54.2 PSF (END ZONE) WALL COMPONENT & CLADDING LOAD.
E2. Pw = 43.9 PSF (INTERIOR ZONE) WALL COMPONENT & CLADDING LOAD.
F1. Pr = 40.5 PSF (INTERIOR ZONE) ROOF COMPONENT & CLADDING LOAD.
F2. Pr = 47.3 PSF (END ZONE) ROOF COMPONENT & CLADDING LOAD.
F3. Pr = 47.3 PSF (CORNER ZONE) ROOF COMPONENT & CLADDING LOAD.
G1. OVERHANG = 68.6 PSF (SIDE ZONE)
G2. OVERHANG = 68.6 PSF (CORNER ZONE)
H. THIS BUILDING IS NOT DESIGNED FOR PLACEMENT ON THE UPPER HALF OF A HILL OR ESCARPMENT EXCEEDING 15 FEET IN HEIGHT.
WALL HEIGHT: 96 1/4" MAX. SEISMIC DESIGN CATEGORY : C

TCDL = 7 PSF
BCDL = 7 PSF
TCLL = 10 PSF

Drawing Description Index	Page #:	Drawing Description Index	Page #:
Typical Elevations	1A, 1B	Cross Section Details	10A, 10B
Floor Plan	2	Ship Loose Window Protectors	11
Electrical Plan	3	Framing datails	12A, B, C, D & E
Pressure System	4	Shearwalls	13A, 13B, 13C
Drain System	5, 6	Connection Details	14A, 15B
HVAC System	7, 8	Porch Framing Details	15
Off-Frame Foundation Plans	9A, 9B	Trusses	16
On-Frame Foundation Plans	9C.1-4, 9D, 9E	Calculation	17

P.E. Seal

NADER TOMASBI
REGISTERED PROFESSIONAL ENGINEER
16679
07/25/2007
STATE OF MISSISSIPPI

3rd Party Stamp

Thermal Design Criteria (Insulation):

R-11 Floors; R-19 Walls; R-30 Min. Roof (Doors - U=.40 min.; Windows - U=.35 or better)

Building Site Installation Requirements:

The following items have not been completed by the building manufacturer, have not been inspected by the third party inspection agency, and are not certified by the state modular label and/or certification. Code compliance for these items must be determined at the local level:

1). The completed foundation support system and tie down and/or anchorage system.
2). Electrical service hookup (including any feeders or service wires/cables, or the Service Panel if not installed in factory).
3). Building drains, cleanouts, and hookups to plumbing system, or a portion thereof, and any/and/or all finish plumbing.
4). Ramps, stairs, and general means of access to the building.
5). Install R-6.5 insulation on all piping installed in unconditioned spaces.
6). HVAC system crossover ducts and/or entire HVAC systems or a portion thereof. (including but not limited to: below floor ducting, external heat pumps, A/C units, etc.)
7). Crawl space or basement light and switch.
8). Manufacturer's installation instructions shall be availble on the job site at the time of inspection.

Additional Notes:

Typical foundation details provided w/ this drawing set. The design criteria herein is for this system only as shown. For other design deviations or special site requirements, consult a licensed Professional Engineer locally. If the foundation plans are designed by others, the designer of the building plans shall not be held responsible or liable for the foundation design and the consequential performance of the superstructure's structural components and systems related thereto.
Areas within hurricane prone regions within one mile of the coastal mean high water line w/ wind speed of 110 or greater or a basic wind speed of 120 mph or greater must have window protection installed on-site by others. Window protection must meet the requirements of the code and the "Large Missile Test".
STRUCTURE NOT TO BE LOCATED IN FLOOD PLANE AREAS UNLESS A LOCAL P.E. DESIGNS FOUNDATION FOR SUCH AREAS.
ASCE 7-02 - Construction in areas where basic wind speeds exceed 110 mph to be designed by one of four methods described in section R301.2.1.1

Disclaimer: These drawings have been prepared and reviewed in accordance with all applicable codes. This drawing set is not intended to be all inclusive, nor does this set detail every code required aspect of this building. Compliance with all applicable codes per local authority having jurisdiction whether detailed in this set or not must be met. This document is developed based on information provided by State of Mississippi Emergency Management Agency (project # STMS012507).

dti design•tech•inc

STATE FIRE MARSHAL
STATE OF MISSISSIPPI
DATE: 08/23/07

RECEIVED
AUG 09 2007
STATE MISS. INSURANCE DEPT
FIRE MARSHALS OFFICE

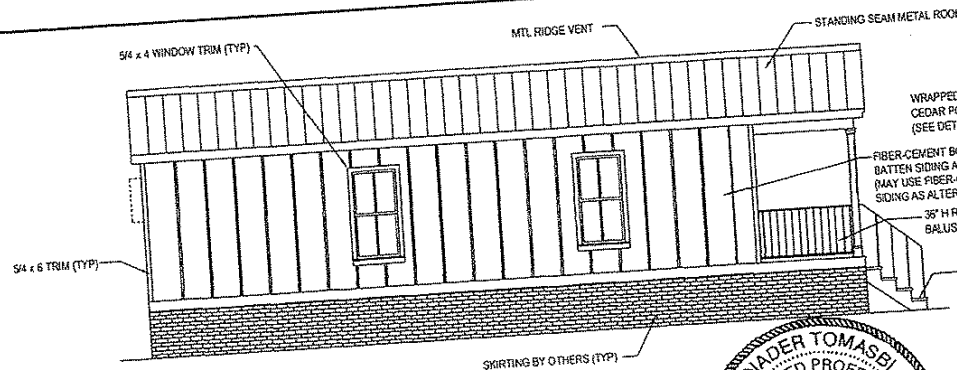

LEFT ELEVATION

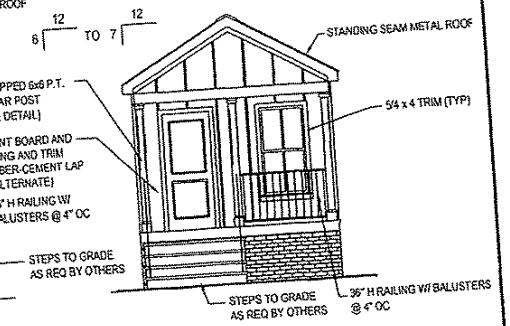

FRONT ELEVATION

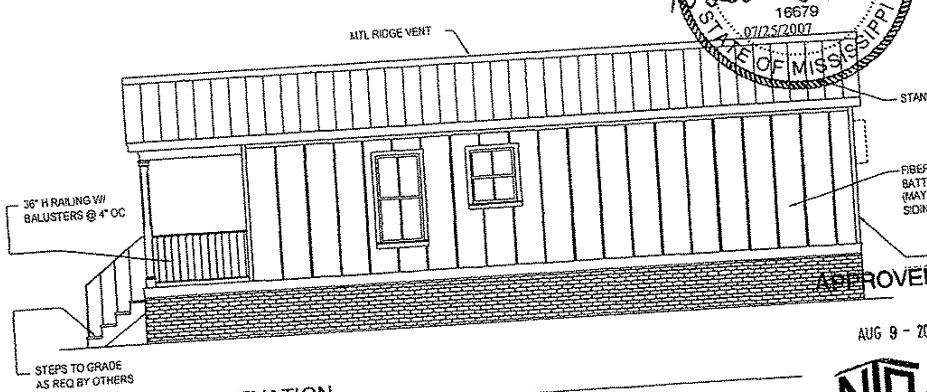

RIGHT ELEVATION

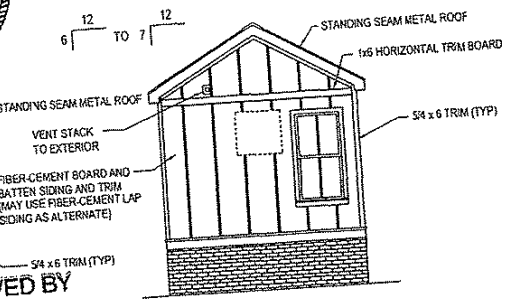

REAR ELEVATION

Must install 15/32" OSB or plywood, 32/16 rated sheathing under metal roof. Fasten sheathing to trusses with 7/16" x 1 1/2" x 15ga. staples or 0.131 x 2" nails 3" OC at edges and 3" OC field. Metal roof approval and installation must be provided by metal roof manufacturer for applied wind load (PE sealed) and is not part of this package.

NADER TOMASBI
REGISTERED PROFESSIONAL ENGINEER
16679
07/25/2007
STATE OF MISSISSIPPI

APPROVED BY
AUG 9 - 2007
NTA INC

REQUIRED ATTIC VENTILATION 1/300 WITH VENTILATED RIDGE AND SOFFIT 1.32 SQ. FT.

APPROVED
BY
STATE FIRE MARSHAL'S OFFICE
STATE OF MISSISSIPPI
DATE: 08/13/07 M.C

STMS012507 MS MODULAR	Title: Elevations	dti design•tech•inc	Drawn By: . Date: . Revised By: . Date: .	Model No. 1240	Pg. 1A

APPROVED
BY
STATE FIRE MARSHAL'S OFFICE
STATE OF MISSISSIPPI
DATE: 08/13/07 M.A.

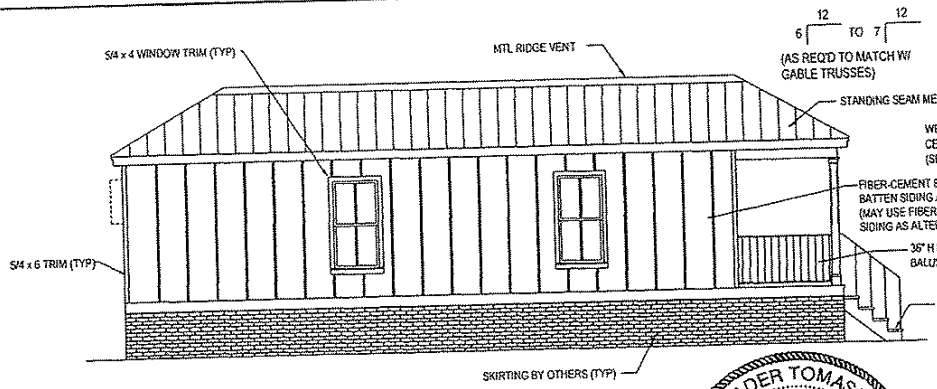

LEFT ELEVATION

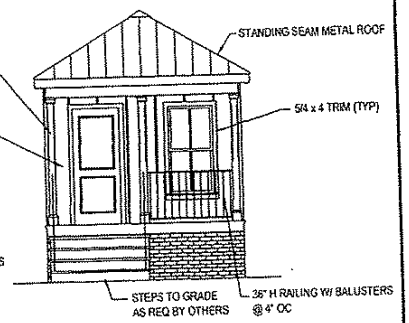

FRONT ELEVATION

NADER TOMASBI
REGISTERED PROFESSIONAL
ENGINEER
16679
07/25/2007
STATE OF MISSISSIPPI

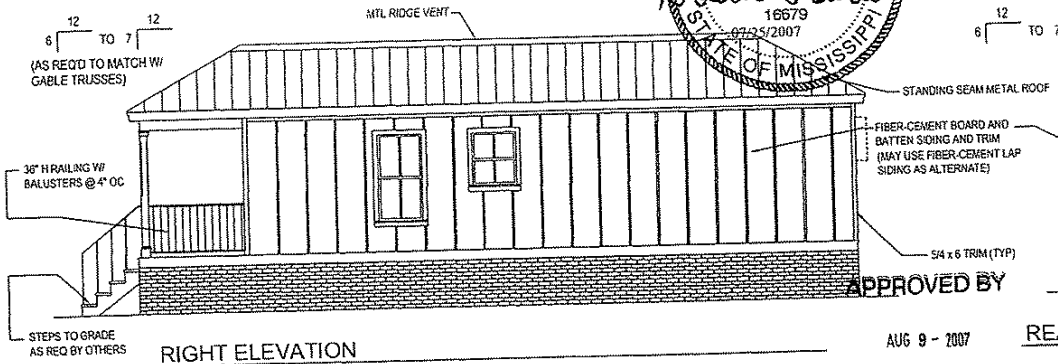

RIGHT ELEVATION

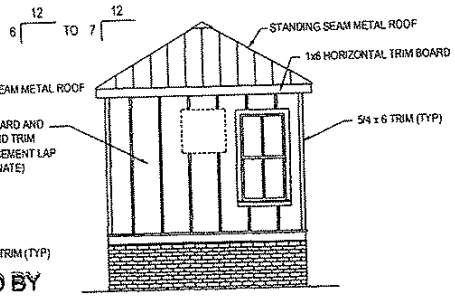

REAR ELEVATION

APPROVED BY
AUG 9 - 2007
NIA INC

Must install 15/32" OSB or plywood, 32/16 rated sheathing under metal roof. Fasten sheathing to trusses with 7/16" x 1 1/2" x 15ga. staples or 0.131 x 2" nails 3" OC at edges and 3" OC field. Metal roof approval and installation must be provided by metal roof manufacturer for applied wind load (PE sealed) and is not part of this package.

REQUIRED ATTIC VENTILATION 1/300 WITH VENTILATED RIDGE AND SOFFIT 1.32 SQ. FT.

STMS012507 MS MODULAR	Title: Hip Roof Elevations	dti design•tech•inc	Drawn By: . Date: . Revised By: . Date: .	Model No. 1240	Pg. 1B

A TOTAL SHEAR LENGTH=76"
150 MPH,EXP.'B'=327 PLF
2-FLOOR #2 SYP JOIST UNDER SHEARWALL

B TOTAL SHEAR LENGTH=87"
150 MPH,EXP.'B'=508 PLF
5-FLOOR #2 SYP JOIST UNDER SHEARWALL

C TOTAL SHEAR LENGTH=75"
150 MPH,EXP.'B'=633 PLF
3-FLOOR #2 SYP JOIST
1-FLOOR #2 SYP PT JOIST UNDER SHEARWALL

0 1' 2' 5' 10'
SCALE BAR

MAY USE #2 SPF IN PLACE OF #2 SYP FOR STANDARD FLOOR JOISTS. NOT APPLICABLE TO FLOOR JOISTS AT PORCH AREA OR FOR FLOOR JOISTS UNDER SHEARWALLS..

APPROVED
BY
STATE FIRE MARSHAL'S OFFICE
STATE OF MISSISSIPPI
DATE: 08/13/07 M.G

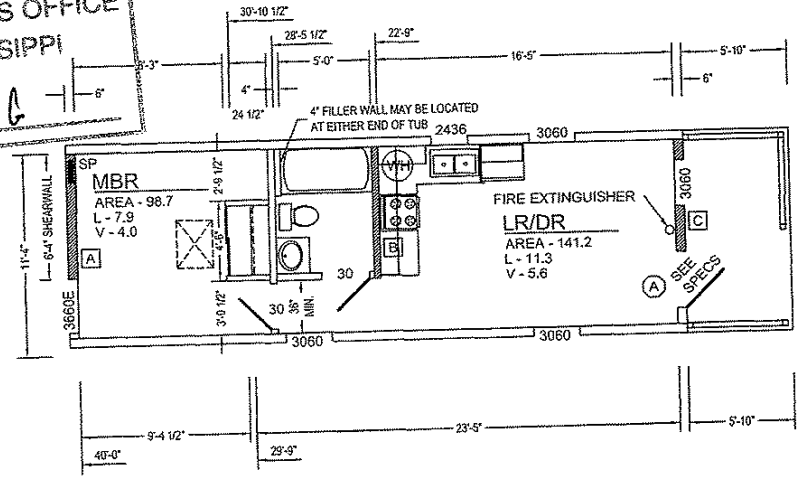

APPROVED BY
AUG 9 - 2007
NIA INC

NADER TOMASBI
REGISTERED PROFESSIONAL ENGINEER
16679
08/09/2007
STATE OF MISSISSIPPI

(A) -36" MIN. DOOR WIDTH
TOTAL WINDOW AREA - 68.90 SQ. FT.
'E' - INDICATES EGRESS WINDOW
DATA PLATE LOCATION - KITCHEN BASE COVER
STATE LABEL LOCATION - KITCHEN SINK BASE CABINET
THIRD PARTY LOCATION - KITCHEN SINK BASE CABINET
SECONDARY STATE LABEL LOCATION-MASTER BATH LAV CABINET

22"X30" ATTIC ACCESS REQUIRED WHEN CLEAR HEIGHT OF ATTIC EXCEEDS 30".

ALL WALLS 4 1/2" THICK UNLESS NOTED

Forest River H. Plant 3 -66700 State Road 19 Wakarusa IN 46573	Title: Floor Plan	dti design•tech•inc	Drawn By: . Date: . Revised By:. Date: .	Model No. 1240	Pg. 2

APPROVED
BY
STATE FIRE MARSHALL'S OFFICE
STATE OF MISSISSIPPI
DATE: 08/13/07 MC

SYMBOLS

X = CIRCUIT NUMBER

- 15A RECEPT
- CEILING LIGHT
- SINGLE SWITCH
- THERMOSTAT
- AC/DC SMOKE ALARM, ALL TO BE INTERCONNECTED PER MANUFACTURER'S INSTRUCTIONS AND ALL APPLICABLE CODES
- MECHANICAL FAN
- WALL MOUNTED LIGHT
- 3-WAY SWITCH
- SWITCH RUN
- 20A RECEPT
- * GFCI PROTECTED
- DOUBLE SWITCH
- TV JACK
- COMBINATION SMOKE ALARM AND CARBON MONOXIDE ALARM, TO BE INTERCONNECTED PER MANUFACTURER'S INSTRUCTIONS AND ALL APPLICABLE CODES
- J-BOX FOR ELECTRICAL CONNECTION
- PHONE JACK
- HVAC UNIT

0 1' 2' 5' 10'
SCALE BAR

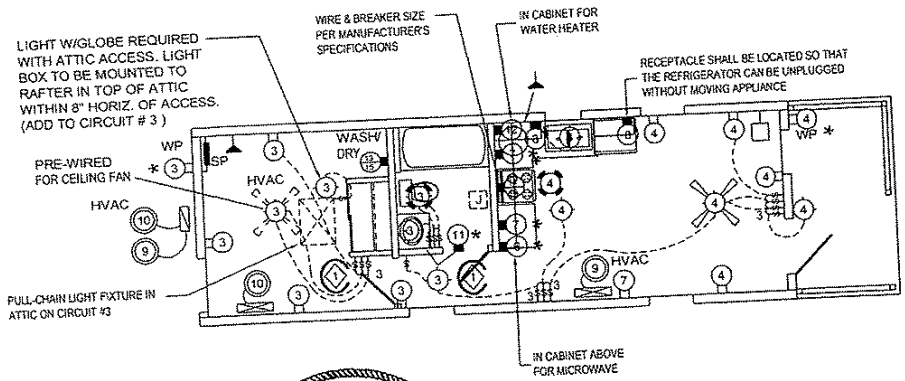

APPROVED BY
AUG 9 - 2007
NTA INC

SERVICE SIZE
125 AMPERE

NADER TOMASBI
REGISTERED PROFESSIONAL ENGINEER
16679
07/25/2007
STATE OF MISSISSIPPI

NOTE:
ALL HOMES ARE BUILT TO MEET THE 2005 NATIONAL ELECTRICAL CODE

NOTES:

ALL SMOKE ALARMS W/ BATTERY BACK-UP TO BE INTERCONNECTED WITH A 14 GAUGE MIN. INTERCONNECTION WIRE OR EQUIVALENT PER MANUFACTURER'S RECOMMENDATIONS.

000 -BRKR./WIRE SIZES TO BE DETERMINED AND SUPPLIED ON-SITE BY OTHERS.

ALL BRANCH CIRCUITS SUPPLYING 15A AND 20A OUTLETS IN BEDROOMS ARE PROTECTED BY AN ARC-FAULT CIRCUIT INTERRUPTER IN ACCORDANCE WITH SECTION 210.12 OF THE NEC.

22"X30" ATTIC ACCESS REQUIRED WHEN CLEAR HEIGHT OF ATTIC EXCEEDS 30".

CIRCUIT LEGEND

CIRCUIT No.	DESCRIPTION	WIRE SIZE	BREAKER SIZE
1	GENERAL LIGHTING	14-2 W/GR.	15A-S. POLE
2	N/A	N/A	N/A
3	GENERAL LIGHTING	14-2 W/GR.	15A-S. POLE
4	GENERAL LIGHTING	14-2 W/GR.	15A-S. POLE
5	N/A	N/A	N/A
6	MICROWAVE	12-2 W/GR.	20A-D. POLE
7	APPLIANCE CIRCUIT	12-2 W/GR.	20A-S. POLE
8	APPLIANCE CIRCUIT	12-2 W/GR.	20A-S. POLE
9	HVAC SYSTEM INSTALLED PER MANUFACTURERS SPECS OR DESIGNED/INSTALLED BY OTHERS		
10			
11	BATH RECEPT CIRCUIT	12-2 W/GR.	20A-S. POLE
12	WATER HEATER	10-2 W/GR.	25A-S. POLE
13,15	ELECTRIC W/D	12-2 W/GR.	20A-D. POLE
14,16	ELECTRIC RANGE	8-3 W/GR.	40A-D. POLE

STMS012507 MS MODULAR	Title: Electrical Plan	dti design•tech•inc	Drawn By: . Date: . Revised By: . Date: .	Model No. 1240	Pg. 3

APPROVED
BY
STATE FIRE MARSHAL'S OFFICE
STATE OF MISSISSIPPI
DATE: 08/13/07 MG

Ocean Springs - Provide an expansion tank or other device designed for intermittent operation for thermal expansion control at the water heater if a backflow preventer is on or to be installed on the water line or at the meter.

Long Beach - Provide a manifold with proper labeling if PEX tubing and fittings are installed on water system. Further, such PEX tubing and fittings shall be installed in accordance with the manufacturer's published instructions, the applicable codes and any ES reort regarding the particular PEX product. Where differences exist, the instructions in any ES Report pertaining to the applicable PEX product shall govern.

NADER TOMASBI
REGISTERED PROFESSIONAL
ENGINEER
16679
07/25/2007
STATE OF MISSISSIPPI

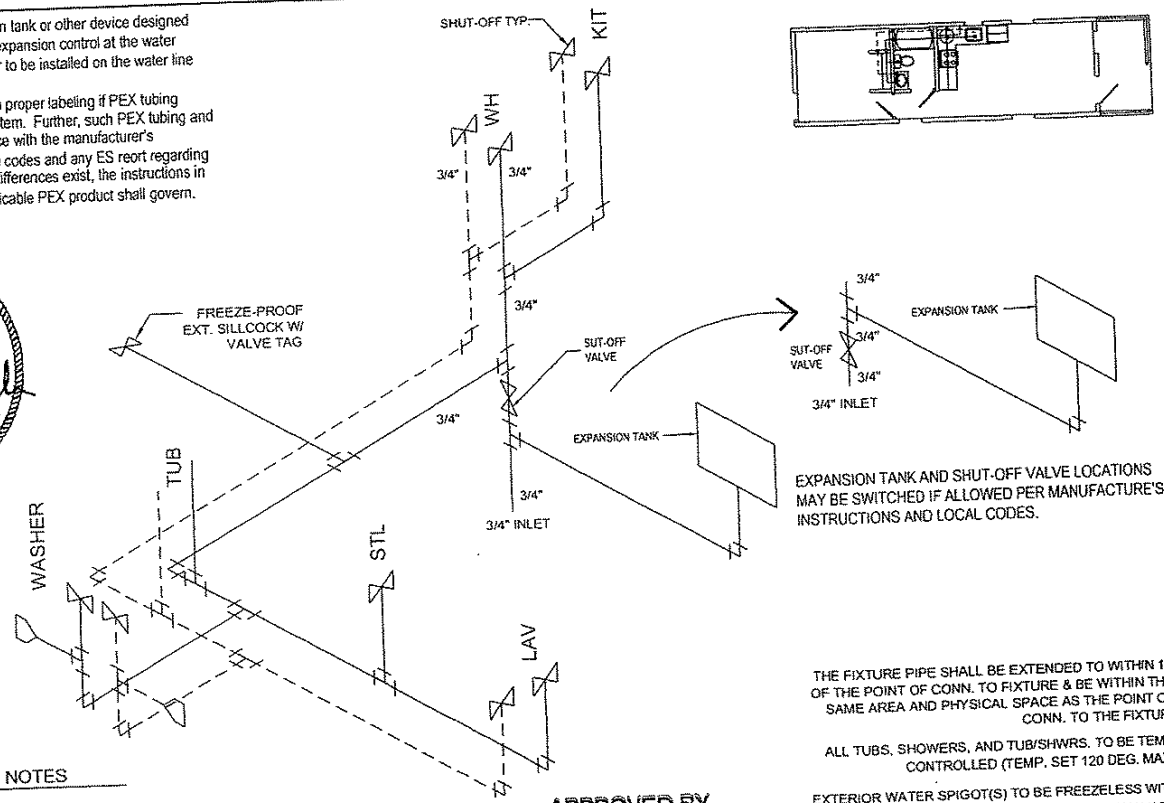

EXPANSION TANK AND SHUT-OFF VALVE LOCATIONS MAY BE SWITCHED IF ALLOWED PER MANUFACTURE'S INSTRUCTIONS AND LOCAL CODES.

PRESSURE SYSTEM NOTES

- COLD LINE
- HOT LINE
- SHUT-OFF VALVE
- MECHANICAL WATER HAMMER ARRESTOR

ALL LINES 1/2" UNLESS NOTED
SEE FITTING CHART FOR INDEX

PIPE SUPPORT

VERTICAL PIPING	SUPPORTS AT 10' O.C. MAX. OR BETWEEN FLOOR LEVELS.
HORIZONTAL PIPING	SUPPORTS AT 4' O.C. MAX., ENDS OF BRANCHES, AND AT CHANGES IN ELEVATION AND/OR DIRECTION.

APPROVED BY
AUG 9 - 2007
NTA INC

THE FIXTURE PIPE SHALL BE EXTENDED TO WITHIN 12" OF THE POINT OF CONN. TO FIXTURE & BE WITHIN THE SAME AREA AND PHYSICAL SPACE AS THE POINT OF CONN. TO THE FIXTURE.

ALL TUBS, SHOWERS, AND TUB/SHWRS. TO BE TEMP. CONTROLLED (TEMP. SET 120 DEG. MAX.)

EXTERIOR WATER SPIGOT(S) TO BE FREEZELESS WITH VACUUM BREAK. LOCATION(S) MAY VARY.

PRESSURE SYSTEM PLUMBING TO BE PEX, CPVC OR EQUAL MATERIAL, APPROVED FOR FRESH WATER APPLICATIONS.

ANY TRANSITIONS TO MATERIALS OTHER THAN THE SPECIFIED MATERIAL MUST INCORPORATE AN APPROVED FITTING FOR CONNECTION.

ALL BELOW FLOOR PLUMBING ILLUSTRATIONS ARE RECOMMENDATIONS ONLY. ON-SITE CONDITIONS AND/OR RESTRICTIONS MAY REQUIRE SOME MODIFICATIONS.

STMS012507 MS MODULAR	Title: Pressure System	dti design•tech•inc	Drawn By: . Date: . / Revised By: . Date: .	Model No. 1240	Pg. 4

APPROVED
BY
STATE FIRE MARSHAL'S OFFICE
STATE OF MISSISSIPPI
DATE: 08/13/07 MG

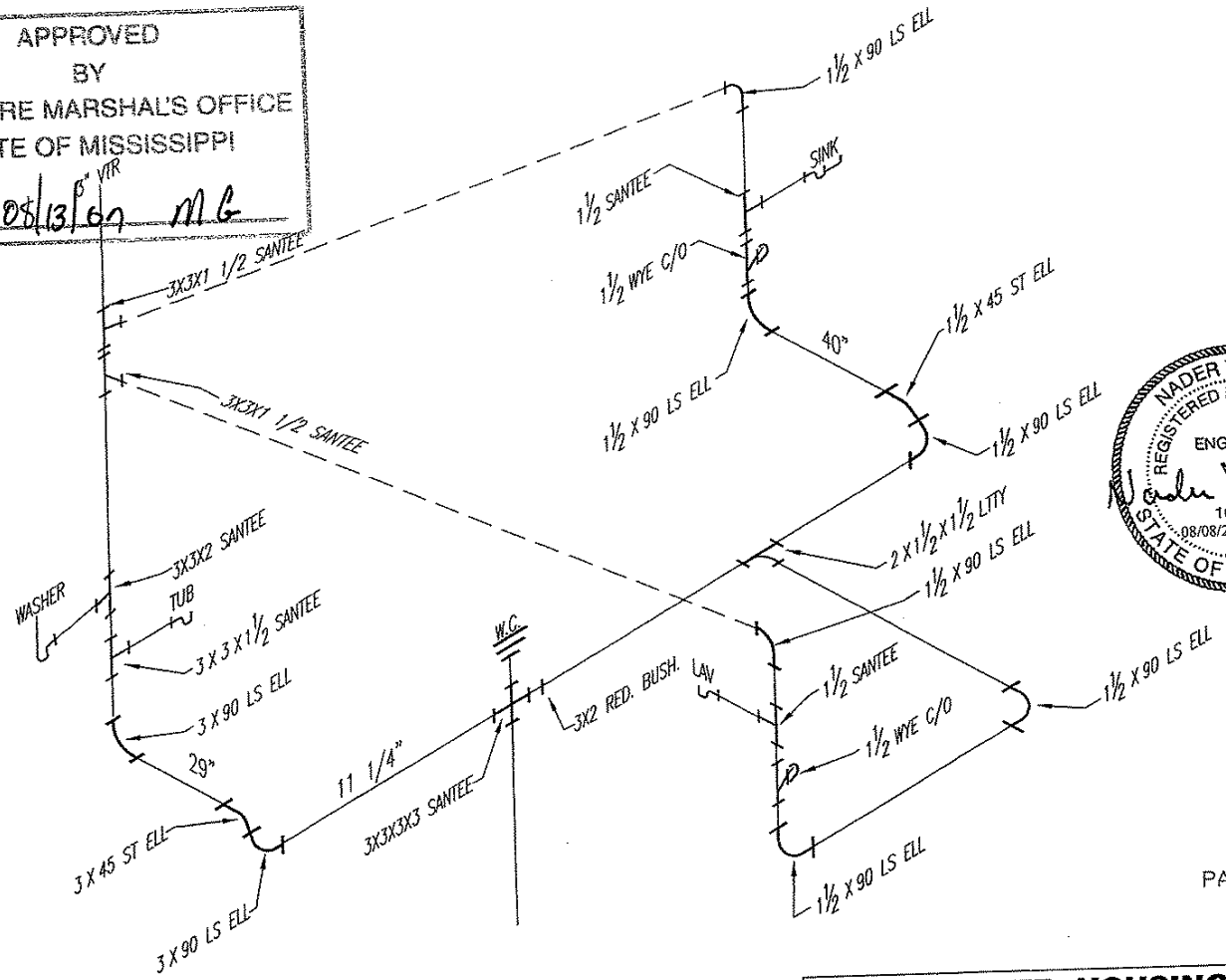

NADER TOMASBI
REGISTERED PROFESSIONAL
ENGINEER
16679
08/08/2007
STATE OF MISSISSIPPI

APPROVED BY
AUG 9 - 2007
NTA INC

PAGE-5.

FOREST RIVER HOUSING INC.	
TITLE: DRAIN LNES DATE 5/31/2007	MODEL IDENTIFICATION NU-HART
STATE APPROVED MODEL NUMBER: MS. PARK MODEL	

APPROVED
BY
STATE FIRE MARSHAL'S OFFICE
STATE OF MISSISSIPPI
DATE: 08/13/07

DRAIN SYSTEM NOTES

- BELOW FLOOR DECKING
- BELOW FLOOR ASSEMBLY

ALL BELOW FLOOR PLUMBING BY OTHERS

ALL FITTINGS BELOW BOTTOM CAN BE SHIPPED LOOSE

ALL BELOW FLOOR PLUMBING ILLUSTRATIONS ARE RECOMMENDATIONS ONLY. ON-SITE CONDITIONS AND/OR RESTRICTIONS MAY REQUIRE SOME MODIFICATIONS.

OPT. GARBAGE DISPOSAL TO BE LOCATED ON KITCHEN SINK WASTE ASSEM.

ALL VENTS THRU ROOF TO BE 3", 12" MIN. ABOVE AND BELOW ROOF PENETRATION

ALL P-TRAPS TO BE 1 1/2 UNLESS NOTED

HORIZONTAL VENT SLOPE - 1/8" PER FOOT

HORIZONTAL DRAIN SLOPE - 1/4" PER FOOT

DRAIN, WASTE, AND VENT PLUMBING TO BE ABS PLASTIC, OR EQUAL. APPROVED FOR DWV APPLICATIONS.

ANY TRANSITIONS TO MATERIALS OTHER THAN THE SPECIFIED MATERIAL MUST INCORPORATE AN APPROVED FITTING FOR CONNECTION.

ALL PLUMBING TO MEET OR EXCEED CURRENT ADOPTED PLUMBING CODES

APPROVED BY

AUG 9 - 2007

NTA INC

NOTCHES OR HOLES IN STUDS.

IN CONCEALED SPACES WHERE PIPING IS INSTALLED THROUGH HOLES OR NOTCHES IN STUDS LESS THAN 1 1/2" FROM EDGE FROM NEAREST EDGE OF THE MEMBER, THE PIPE SHALL BE PROTECTED BY SHIELD PLATES. PROTECTIVE SHIELD PLATES SHALL BE A MIN. OF 1/16" THICK STEEL. PLATES SHALL COVER AREA OF THE PIPE WHERE THE MEMBER IS NOTCHED OR BORED, AND SHALL EXTEND A MIN. OF 2" ABOVE SOLE PLATES AND BELOW TOP PLATES.

HOLES IN JOISTS

HOLES IN JOISTS, OR SIMILAR MEMBER MUST BE 2" MIN. FROM EDGE PER RCO & IRC 502.8 AND 802.7.1

NADER TOMASBI
REGISTERED PROFESSIONAL
ENGINEER
16679
07/25/2007
STATE OF MISSISSIPPI

PIPE SUPPORT

VERTICAL PIPING	SUPPORTS AT 10' O.C. MAX. OR BETWEEN FLOOR LEVELS.
HORIZONTAL PIPING	SUPPORTS AT 4' O.C. MAX., ENDS OF BRANCHES, AND AT CHANGES IN ELEVATION AND/OR DIRECTION.
TRAP ARMS	SUPPORT LOCATED AS CLOSE TO TRAP AS POSSIBLE WHEN TRAP TO VENT EXCEEDS 3'.

SEE PAGE 5 FOR ADDITIONAL NOTES, SPECS., DETAILS, ETC.

RES*check* Software Version 4.0.1

Compliance Certificate

NADER TOMASBI
REGISTERED PROFESSIONAL
ENGINEER
16679
07/25/2007
STATE OF MISSISSIPPI

Report Date: 04/19/07
Data filename: N:\MOD\01 INDIANA\RESCHECK\2R-24 Wide\1240MS.rck

Energy Code:	2003 IECC
Location:	Holly Springs (Marshall), Mississippi
Construction Type:	Single Family
Glazing Area Percentage:	10%
Heating Degree Days:	3714

Construction Site: Owner/Agent: Designer/Contractor:

Compliance Passes Maximum UA: 150 Your Home UA: 126 14.7% Better Than Code (UA)

Assembly	Gross Area or Perimeter	Cavity R-Value	Cont. R-Value	Glazing or Door U-Factor	UA
Ceiling 1: Flat Ceiling or Scissor Truss:	387	30.0	0.0		14
Wall 1: Wood Frame, 16" o.c.:	728	19.0	0.0		38
Window 1: Metal Frame:Double Pane with Low-E:	70			0.35	24.5
Door 1: Solid:	21			0.4	8.4
Floor 1: All-Wood Joist/Truss:Over Unconditioned Space:	387	11.0	0.0		28
Furnace 1: Forced Hot Air: 78 AFUE					
Air Conditioner 1: Electric Central Air: 13 SEER					

Compliance Statement: The proposed building design described here is consistent with the building plans, specifications, and other calculations submitted with the permit application. The proposed building has been designed to meet the 2003 IECC requirements in RES*check* Version 4.0.1 and to comply with the mandatory requirements listed in the RES*check* Inspection Checklist.

Name - Title Signature Date

APPROVED BY

AUG 9 - 2007

NIA INC.

APPROVED
BY
STATE FIRE MARSHAL'S OFFICE
STATE OF MISSISSIPPI
DATE: 08/13/07 MC

APPROVED
BY
STATE FIRE MARSHALS OFFICE
STATE OF MISSISSIPPI
DATE: 08/13/07

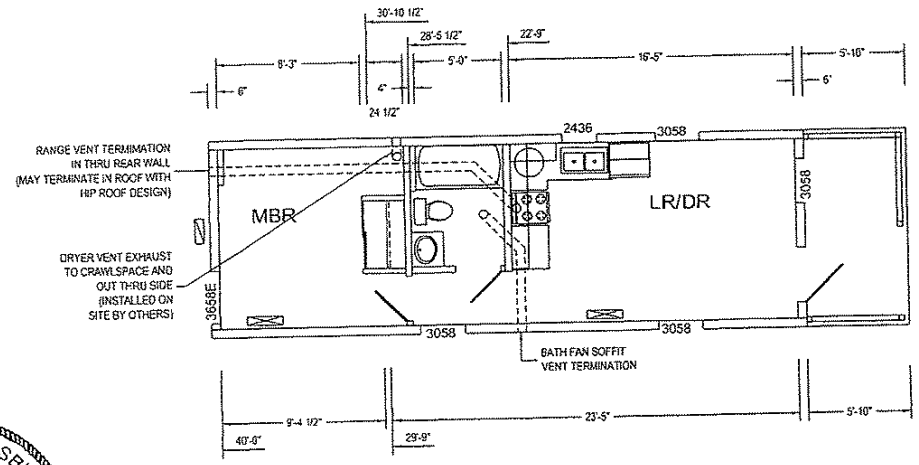

NADER TOMASBI
REGISTERED PROFESSIONAL
ENGINEER
16679
07/25/2007
STATE OF MISSISSIPPI

APPROVED BY
AUG 9 - 2007
NIA INC

-OUTDOOR CONDENSING UNIT
-DUCTLESS INDOOR AC UNIT WITH ELECTRIC HEAT

STMS012507 MS MODULAR	Title: HVAC/Exhaust Fan Duct Plan	design•tech•inc	Drawn By: . Date: . Revised By: . Date: .	Model No. 1240	Pg. 8

APPROVED
BY
STATE FIRE MARSHAL'S OFFICE
STATE OF MISSISSIPPI
DATE: 08/13/07 MG

NOTES:
FOUNDATION TO BE DESIGNED TO MEET THE NOTED LOADS
FOUNDATION DESIGN & TIE DOWNS MUST BE APPROVED BY LOCAL LICENSE ENGINEER/ARCHITECT.

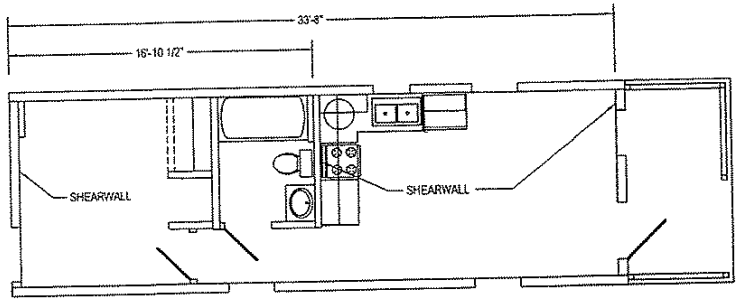

NADER TOMASBI
REGISTERED PROFESSIONAL
ENGINEER
16679
08/09/2007
STATE OF MISSISSIPPI

MAX. GROUND SNOW LOAD : 30 PSF
MAX. WIND SPEED: 150 MPH
WIND EXPOUSURE: B
MAX MEAN ROOF HEIGHT: 30'
SEISMIC DESIGN CATEGORY: C

FOUNDATION BASE ON 2000 PSF SOIL

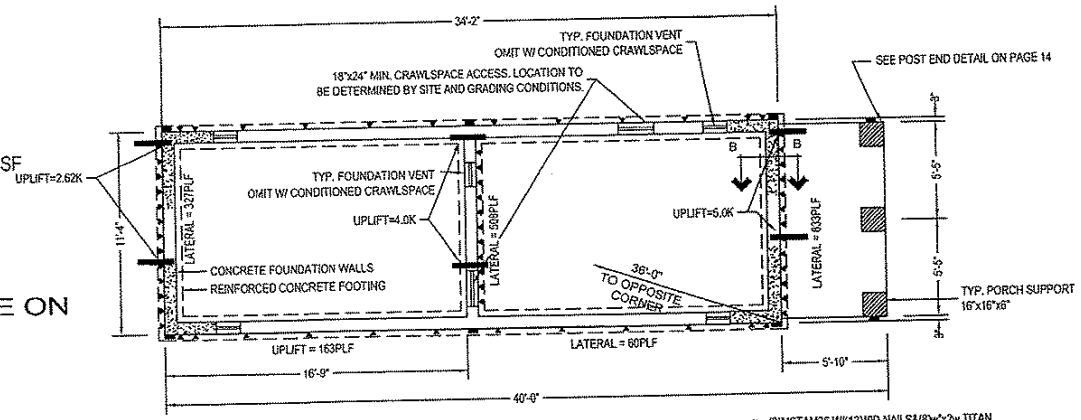

CRAWLSPACE VENTILATION REQUIRED: 2.68 SQ. FT.

■ -(3)MSTAM36 W/(13)10D NAILS(8)w"x2w TITAN

▼ -SIMPSON LTP4 PLATE, FASTEN TO SILL PLATE AND RIM JOIST W/(6) 8Dx1/" NAILS (6) PER EACH MEMBER

APPROVED BY
AUG 9 - 2007
NTA INC

'OFF-FRAME' FOUNDATION NOTES:

1) FOUNDATION LAYOUT IS APPLICABLE TO NOTED MAXIMUM SNOW LOADING AND MINIMUM SOIL BEARING PRESSURE. REFER TO INSTALLATION INSTRUCTION MANUAL FOR OTHER APPLICABLE INFORMATION. CONSULT LOCAL OFFICIALS AND THE APPLICABLE LOCAL CODES FOR OTHER REQUIREMENTS (I.E. DRAINAGE, DAMP-PROOFING, BACKFILL SUPPORT, ETC.).
2) FOR DEVIATIONS AND/OR OTHER FOUNDATION DESIGNS CONSULT A LOCAL PROFESSIONAL ENGINEER AND YOUR LOCAL BUILDING OFFICIAL.
3) SILL PLATE FASTENING TO BE PER INSTALLATION INSTRUCTION AND/OR LOCAL CODES. SILL FASTENING REQUIREMENT IS PER APPLICABLE WIND SPEED AND SEISMIC ZONES. SEE YOUR HOME DATA PLATE FOR APPLICABLE ZONES.
4) CONCRETE COMPRESSIVE STRENGTH (FC'): 3000 PSI.

NOTE: SEE PAGE 9B FOR ADDITIONAL FOUNDATION INFORMATION

Forest River H. Plant 3 -66700 State Road 19 Wakarusa IN 46573	Title: Crawlspace Foundation (30psf)	design•tech•inc	Drawn By: . Date: . Revised By: . Date: .	Model No. 1240	Pg. 9A

APPROVED
BY
STATE FIRE MARSHAL'S OFFICE
STATE OF MISSISSIPPI
DATE: 08/13/07 MC

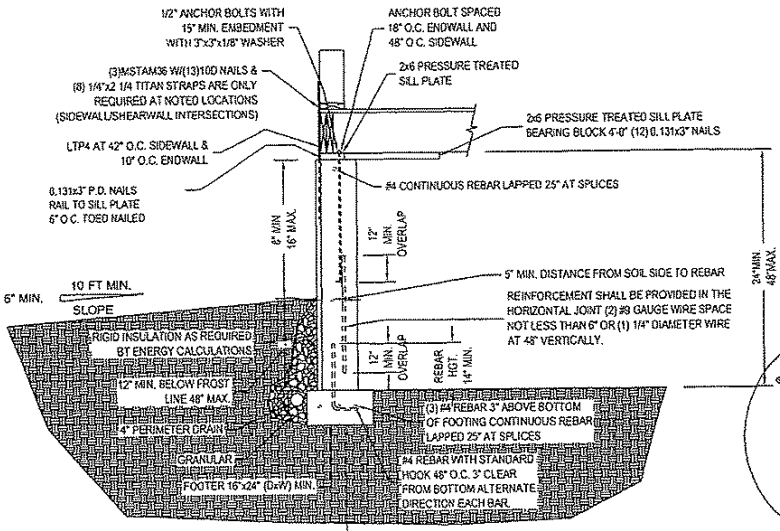

SECTION B-B

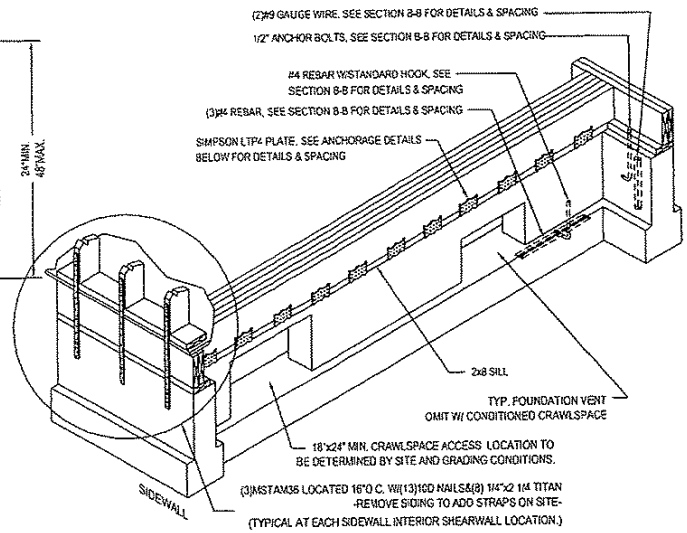

INTERIOR FOUNDATION SHEARWALL DETAIL

NOT TO SCALE

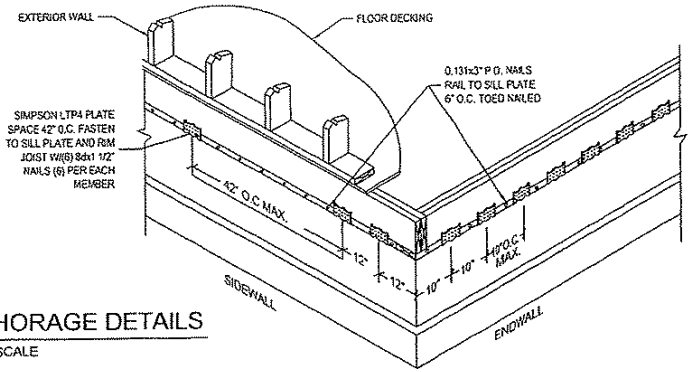

ANCHORAGE DETAILS

NOT TO SCALE

NADER TOMASBI
REGISTERED PROFESSIONAL
ENGINEER
16679
07/25/2007
STATE OF MISSISSIPPI

APPROVED BY

AUG 9 - 2007

NTA INC

WIND SPEED 150 MPH
SEISMIC DESIGN CATEGORY C
SOIL CLASS: GW, GP, SW, AND SP.
LATERAL SOIL LOAD: 30 PSF/FT
MAX. HEIGHT: 4'-0"
MAX. UNBALANCED FILL: 3'-4"

STMS012507 MS MODULAR	Title: Crawlspace Foundation (30psf)	dti design•tech•inc	Drawn By: . Date: . Revised By: . Date: .	Model No. 1240	Pg. 9B

APPROVED
BY
STATE FIRE MARSHALS OFFICE
STATE OF MISSISSIPPI
DATE: 08/13/07 MC

MAX. GROUND SNOW LOAD : 20 PSF
MAX. WIND SPEED: 150 MPH
WIND EXPOUSURE: B
MAX MEAN ROOF HEIGHT: 30'
SEISMIC DESIGN CATEGORY: C

NADER TOMASBI
REGISTERED PROFESSIONAL
ENGINEER
16679
07/25/2007
STATE OF MISSISSIPPI

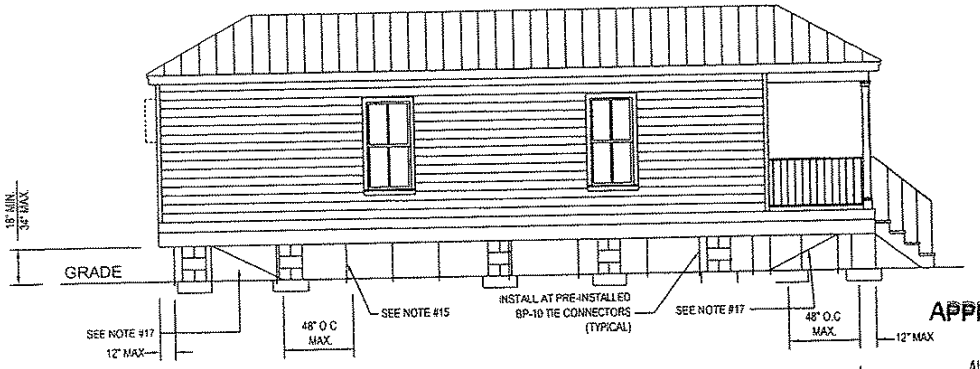

APPROVED BY
AUG 9 - 2007
NIA INC

FOUNDATION BASE ON
800 PSF SOIL

ALL PERIMETER FOOTERS TO BE 16"x16"x6" CONCRETE OR EQUIVALENT RATED FOR 1100 lbs IN NOTED SOIL BEARING PRESSURE. (SEE NOTE #6).
ALL FRAME FOOTERS TO BE 24"x24"x6" OR EQUIVALENT RATED FOR 2467 lbs. IN NOTED SOIL BEARING PRESSURE.

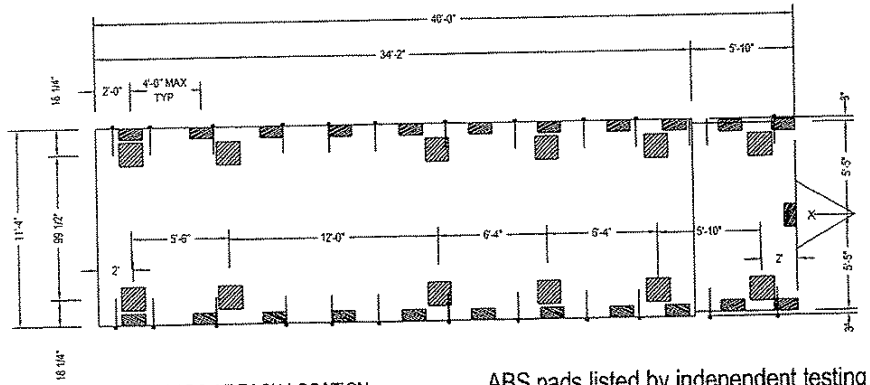

* NOTES PIER LOADS AT EACH LOCATION.
PERIMTER PIERS MAY ROTATED AS REQ.

ABS pads listed by independent testing agency may be used if the rated capacity is in excess of noted pier loads, properly approved for the site conditions and is acceptable to the Local Authority Having Jurisdiction"

'ON-FRAME STANDARD I-BEAM' FOUNDATION NOTES:

1) FOUNDATION LAYOUT IS APPLICABLE TO NOTED MAX. SNOW LOADING, WIND LOAD, SEISMIC CATEGORY & MIN. SOIL BEARING PRESSURE. REFER TO THE INSTALLATION INSTRUCTION MANUAL FOR OTHER APPLICABLE INFORMATION. CONSULT LOCAL OFFICIALS AND THE APPLICABLE LOCAL CODES FOR OTHER REQUIREMENTS (I.E. DRAINAGE, DAMP-PROOFING, BACKFILL SUPPORT, ETC.).
2) FOR DEVIATIONS &/OR OTHER FOUNDATION DESIGNS CONSULT A LOCAL PROFESSIONAL ENGINEER & YOUR LOCAL BUILDING OFFICIAL.
3) CONCRETE COMPRESSIVE STRENGTH (FC'): 3000 PSI MINIMUM.
4) 6" CAST-IN-PLACE FOOTING WHEN SPECIFIED.
5) ALL FOOTINGS MUST BE 12" MIN. INTO NATURAL SOIL & MUST BE BELOW FROST LINE.
6) PERIMETER PIER SPACING MAY INCREASE TO 8'-0" O.C. W/ 24"x24"x6" FOOTING OR EQUIVALENT RATED FOR 2200 lbs.

NOTE: SEE PAGE 9D FOR ADDITIONAL FOUNDATION INFORMATION

STMS012507 MS MODULAR	Title: TEMP. FOUNDATION REQ	design•tech•inc	Drawn By: . Date: . Revised By: . Date: .	Model No. 1240	Pg. 9C.1

APPROVED
BY
STATE FIRE MARSHAL'S OFFICE
STATE OF MISSISSIPPI
DATE: 08/13/07 M.G.

MAX. GROUND SNOW LOAD : 20 PSF
MAX. WIND SPEED: 150 MPH
WIND EXPOUSURE: B
MAX MEAN ROOF HEIGHT: 30'
SEISMIC DESIGN CATEGORY: C

NADER TOMASBI
REGISTERED PROFESSIONAL
ENGINEER
16679
07/25/2007
STATE OF MISSISSIPPI

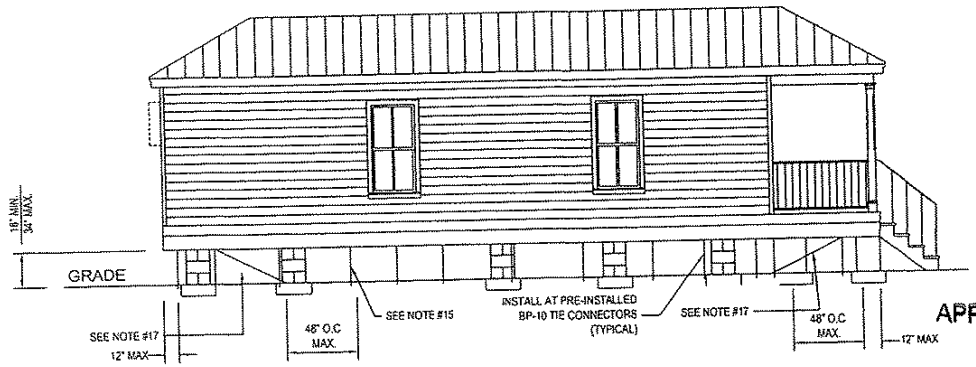

APPROVED BY
AUG 9 - 2007
NTA INC

FOUNDATION BASE ON
1000 PSF SOIL

ALL PERIMETER FOOTERS TO BE 16"x16"x6" CONCRETE OR EQUIVALENT RATED FOR 1460 lbs IN NOTED SOIL BEARING PRESSURE. (SEE NOTE #6).
ALL FRAME FOOTERS TO BE 24"x24"x6" OR EQUIVALENT RATED FOR 2467 lbs. IN NOTED SOIL BEARING PRESSURE.

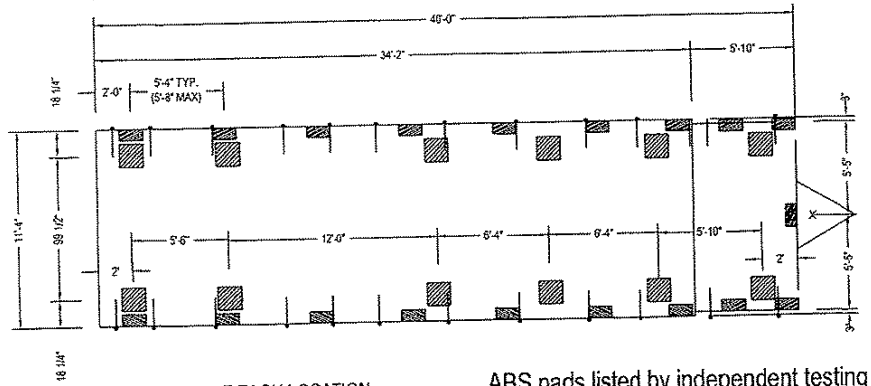

* NOTES PIER LOADS AT EACH LOCATION. PERIMTER PIERS MAY ROTATED AS REQ.

ABS pads listed by independent testing agency may be used if the rated capacity is in excess of noted pier loads, properly approved for the site conditions and is acceptable to the Local Authority Having Jurisdiction"

'ON-FRAME STANDARD I-BEAM' FOUNDATION NOTES:

1) FOUNDATION LAYOUT IS APPLICABLE TO NOTED MAX. SNOW LOADING, WIND LOAD, SEISMIC CATEGORY & MIN. SOIL BEARING PRESSURE. REFER TO THE INSTALLATION INSTRUCTION MANUAL FOR OTHER APPLICABLE INFORMATION. CONSULT LOCAL OFFICIALS AND THE APPLICABLE LOCAL CODES FOR OTHER REQUIREMENTS (I.E. DRAINAGE, DAMP-PROOFING, BACKFILL SUPPORT, ETC.).
2) FOR DEVIATIONS &/OR OTHER FOUNDATION DESIGNS CONSULT A LOCAL PROFESSIONAL ENGINEER & YOUR LOCAL BUILDING OFFICIAL.
3) CONCRETE COMPRESSIVE STRENGTH (FC'): 3000 PSI MINIMUM.
4) 6" CAST-IN-PLACE FOOTING WHEN SPECIFIED.
5) ALL FOOTINGS MUST BE 12" MIN. INTO NATURAL SOIL & MUST BE BELOW FROST LINE.
6) PERIMETER PIER SPACING MAY INCREASE TO 8'-0" O.C. W/ 24"x24"x6" FOOTING OR EQUIVALENT RATED FOR 2200 lbs.

NOTE: SEE PAGE 9D FOR ADDITIONAL FOUNDATION INFORMATION

STMS012507 MS MODULAR	Title: TEMP. FOUNDATION REQ	dti design•tech•inc	Drawn By: . Date: . Revised By: . Date: .	Model No. 1240	Pg. 9C.2

APPROVED
BY
STATE FIRE MARSHALS OFFICE
STATE OF MISSISSIPPI
DATE: 08/30/07

MAX. GROUND SNOW LOAD : 20 PSF
MAX. WIND SPEED: 150 MPH
WIND EXPOUSURE: B
MAX MEAN ROOF HEIGHT: 30'
SEISMIC DESIGN CATEGORY: C

NADER TOMASBI
REGISTERED PROFESSIONAL
ENGINEER
16679
07/25/2007
STATE OF MISSISSIPPI

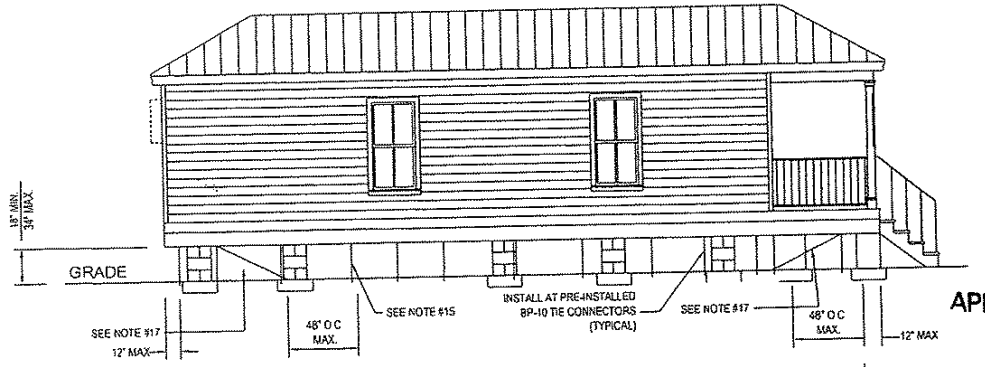

APPROVED BY
AUG 9 - 2007
NTA INC

FOUNDATION BASE ON 1200 PSF SOIL

ALL PERIMETER FOOTERS TO BE 16"x16"x6" CONCRETE OR EQUIVALENT RATED FOR 1810 lbs IN NOTED SOIL BEARING PRESSURE. (SEE NOTE #6).
ALL FRAME FOOTERS TO BE 24"x24"x6" OR EQUIVALENT RATED FOR 2467 lbs. IN NOTED SOIL BEARING PRESSURE.

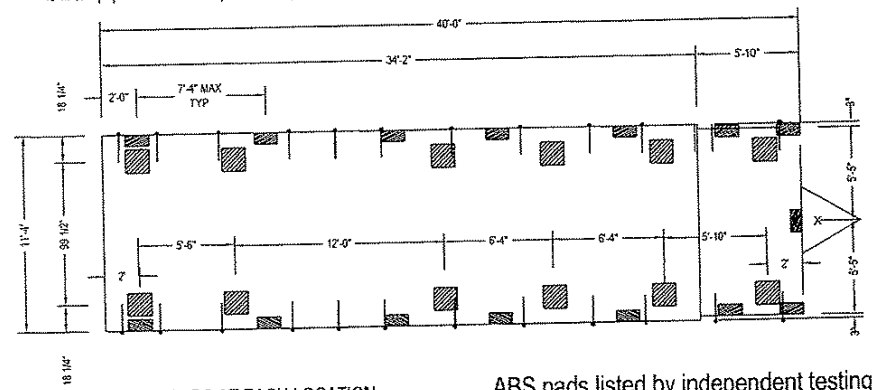

* NOTES PIER LOADS AT EACH LOCATION.
PERIMTER PIERS MAY ROTATED AS REQ.

ABS pads listed by independent testing agency may be used if the rated capacity is in excess of noted pier loads, properly approved for the site conditions and is acceptable to the Local Authority Having Jurisdiction"

'ON-FRAME STANDARD I-BEAM' FOUNDATION NOTES:

1) FOUNDATION LAYOUT IS APPLICABLE TO NOTED MAX. SNOW LOADING, WIND LOAD, SEISMIC CATEGORY & MIN. SOIL BEARING PRESSURE. REFER TO THE INSTALLATION INSTRUCTION MANUAL FOR OTHER APPLICABLE INFORMATION. CONSULT LOCAL OFFICIALS AND THE APPLICABLE LOCAL CODES FOR OTHER REQUIREMENTS (I.E. DRAINAGE, DAMP-PROOFING, BACKFILL SUPPORT, ETC.).
2) FOR DEVIATIONS &/OR OTHER FOUNDATION DESIGNS CONSULT A LOCAL PROFESSIONAL ENGINEER & YOUR LOCAL BUILDING OFFICIAL.
3) CONCRETE COMPRESSIVE STRENGTH (FC'): 3000 PSI MINIMUM.
4) 6" CAST-IN-PLACE FOOTING WHEN SPECIFIED.
5) ALL FOOTINGS MUST BE 12" MIN. INTO NATURAL SOIL & MUST BE BELOW FROST LINE.
6) PERIMETER PIER SPACING MAY INCREASE TO 10'-0" O.C. W/ 24"x24"x6" FOOTING OR EQUIVALENT RATED FOR 2470 lbs.

NOTE: SEE PAGE 9D FOR ADDITIONAL FOUNDATION INFORMATION

STMS012507 MS MODULAR	Title: TEMP. FOUNDATION REQ	design+tech+inc	Drawn By: . Date: . Revised By: . Date: .	Model No. 1240	Pg. 9C.3

APPROVED
BY
STATE FIRE MARSHAL'S OFFICE
STATE OF MISSISSIPPI
DATE: 08/13/07 M.G.

MAX. GROUND SNOW LOAD : 20 PSF
MAX. WIND SPEED: 150 MPH
WIND EXPOUSURE: B
MAX MEAN ROOF HEIGHT: 30'
SEISMIC DESIGN CATEGORY: C

NADER TOMASBI
REGISTERED PROFESSIONAL
ENGINEER
16679
07/25/2007
STATE OF MISSISSIPPI

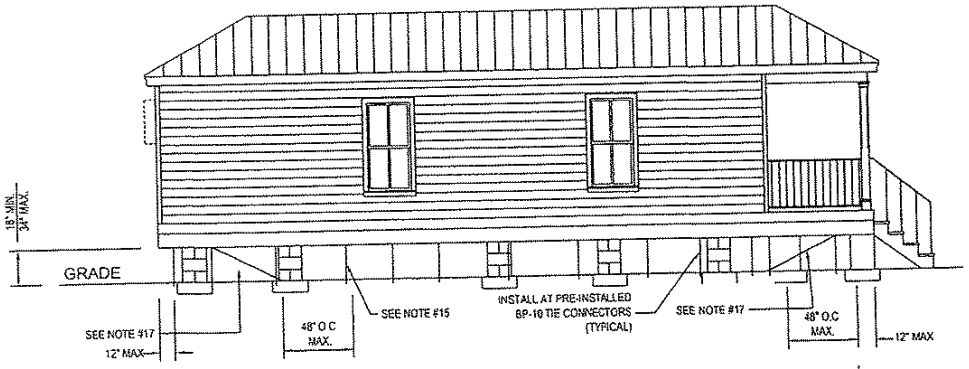

APPROVED BY
AUG 9 - 2007
NTA INC

FOUNDATION BASE ON
2000 PSF SOIL

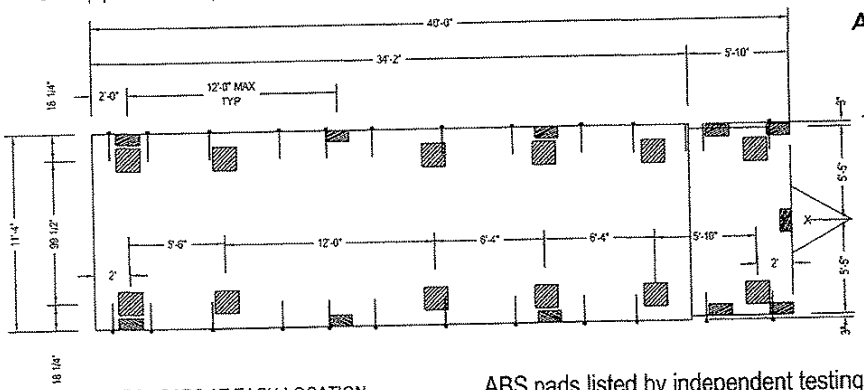

ALL PERIMETER FOOTERS TO BE 16"x16"x6" CONCRETE OR EQUIVALENT RATED FOR 3280 lbs IN NOTED SOIL BEARING PRESSURE. ALL FRAME FOOTERS TO BE 24"x24"x6" OR EQUIVALENT RATED FOR 2467 lbs. IN NOTED SOIL BEARING PRESSURE.

* NOTES PIER LOADS AT EACH LOCATION.
PERIMTER PIERS MAY ROTATED AS REQ.

ABS pads listed by independent testing agency may be used if the rated capacity is in excess of noted pier loads, properly approved for the site conditions and is acceptable to the Local Authority Having Jurisdiction"

'ON-FRAME STANDARD I-BEAM' FOUNDATION NOTES:

1) FOUNDATION LAYOUT IS APPLICABLE TO NOTED MAX. SNOW LOADING, WIND LOAD, SEISMIC CATEGORY & MIN. SOIL BEARING PRESSURE. REFER TO THE INSTALLATION INSTRUCTION MANUAL FOR OTHER APPLICABLE INFORMATION. CONSULT LOCAL OFFICIALS AND THE APPLICABLE LOCAL CODES FOR OTHER REQUIREMENTS (I.E. DRAINAGE, DAMP-PROOFING, BACKFILL SUPPORT, ETC.).
2) FOR DEVIATIONS &/OR OTHER FOUNDATION DESIGNS CONSULT A LOCAL PROFESSIONAL ENGINEER & YOUR LOCAL BUILDING OFFICIAL.
3) CONCRETE COMPRESSIVE STRENGTH (FC'): 3000 PSI MINIMUM.
4) 6" CAST-IN-PLACE FOOTING WHEN SPECIFIED.
5) ALL FOOTINGS MUST BE 12" MIN. INTO NATURAL SOIL & MUST BE BELOW FROST LINE.

NOTE: SEE PAGE 9D FOR ADDITIONAL FOUNDATION INFORMATION

STMS012507 MS MODULAR	Title: TEMP. FOUNDATION REQ	design+tech+inc	Drawn By: . Date: . Revised By: . Date: .	Model No. 1240	Pg. 9C.4

APPROVED
BY
STATE FIRE MARSHALL'S OFFICE
STATE OF MISSISSIPPI
DATE: 08/30/07 MG

NOTES:
1. ALL ORGANIC AND DECAYABLE MATERIAL, SUCH AS GRASS, ROOTS, SCRAP WOOD MUST BE REMOVED BELOW THE HOME.
2. THE SITE SHALL BE PROPERLY GRADED TO PERMIT WATER TO DRAIN AWAY FROM THE HOME.
3. 6-MIL POLYETHYLENE SHEETING VAPOR BARRIER MUST BE INSTALLED COVERING THE ENTIRE AREA BENEATH THE HOME. THE SHEETING SHALL OVERLAP AT LEAST 6" AT ALL JOINTS.
4. THE FOOTING MUST BE PRE-CAST OR POUR-IN-PLACE CONCRETE AT LEAST 6" THICK OR DESIGNED BY A REGISTERED ENGINEER FOR THE LOCAL SOIL CONDITIONS.
5. PIERS TO BE DOUBLE 8"x16" BLOCK. MORTAR OR EXTERIOR STRUCTURAL COATING WHEN REQUIRED BY LOCAL OFFICIALS / CODES.
6. THE PIER SHALL BE CAPPED WITH 2" MAXIMUM HIGH CONCRETE OR WOOD CAP BLOCKS AND 4"x8" HARDWOOD SHIMS TO LEVEL THE HOME. THE SHIMS SHALL COVER THE ENTIRE WIDTH OF THE CAP BLOCKS AND USED IN PAIRS AND DRIVEN TIGHTLY SO THEY DO NOT OCCUPY MORE THAN ONE INCH OF VERTICAL SPACE.
7. THE PIER SHALL BE SPACED A MAXIMUM OF 2 FEET FROM EACH END OF HOME AND A MAXIMUM OF 8 FEET ON CENTER.
8. ADDITIONAL PIERS SHALL BE LOCATED UNDER THE POSTS.
9. THE ANCHOR STRAP SHALL BE A MINIMUM TYPE 1, FINISH B, GRADE ONE STEEL STRAPPING, 1 1/4" WIDE AND 0.035 INCHES THICK CERTIFIED BY A REGISTER ENGINEER CONFORMING WITH ASTM STANDARD D3953.91.
10. THE GROUND ANCHORS MUST HAVE A MINIMUM DESIGN CAPACITY FOR THE SOILS INTENDED OF 3150# CERTIFIED BY A REGISTERED ENGINEER.
11. THE GROUND ANCHORS MUST BE INSTALLED PER THE MANUFACTURERS INSTALLATION REQUIREMENTS.
12. THE TIE-DOWN STRAPS MUST BE PRETENSIONED PER THE MANUFACTURERS INSTALLATION INSTRUCTIONS.
13. ALL GROUND ANCHORS MUST BE LOCATED 12" ABOVE THE WATER TABLE.
14. ALL GROUND ANCHORS MUST BE INSTALLED BELOW THE FROST LINE.
15. VERTICAL AND DIAGONAL TIES 12" FROM PORCH END AND 4'-0" O.C. AND IN LINE WITH DIAGONAL TIES.
16. ADDITIONAL VERTICAL TIES SHALL BE LOCATED AT INTERIOR SHEARWALL LOCATIONS.
17. LONGITUDINAL TIES AT EACH I-BEAM EACH END.

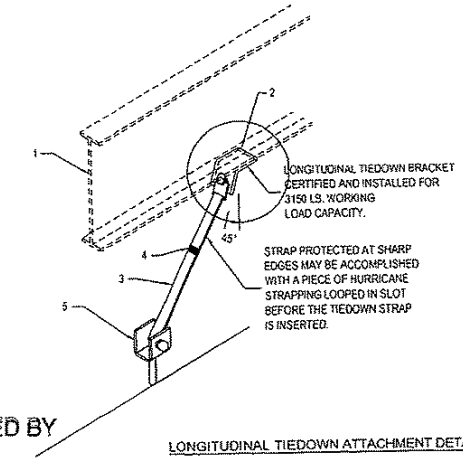

APPROVED BY
AUG 9 - 2007
NIA INC

LONGITUDINAL TIEDOWN ATTACHMENT DETAIL

1. TYPICAL LONGITUDINAL I-BEAM
2. FACTORY INSTALLED TIEDOWN BRACKET
3. LONGITUDINAL TIEDOWN STRAP
4. BANDING SEAL
5. GROUND ANCHOR-INSTALLED TO FULL DEPTH

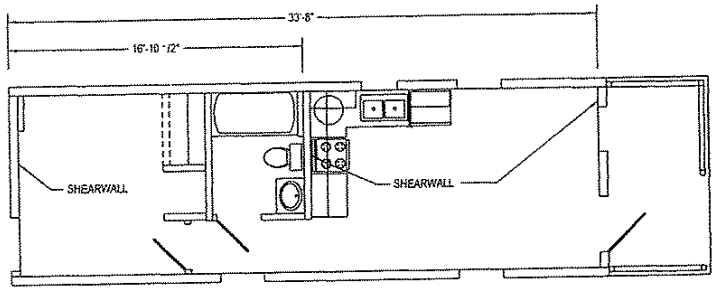

NADER TOMASBI
REGISTERED PROFESSIONAL
ENGINEER
16679
07/25/2007
STATE OF MISSISSIPPI

STMS012507 MS MODULAR	Title: TEMP. FOUNDATION REQ	design•tech•inc	Drawn By: . Date: . Revised By: . Date: .	Model No. 1240	Pg. 9D

APPROVED
BY
STATE FIRE MARSHAL'S OFFICE
STATE OF MISSISSIPPI
DATE: 08/13/07 M.G.

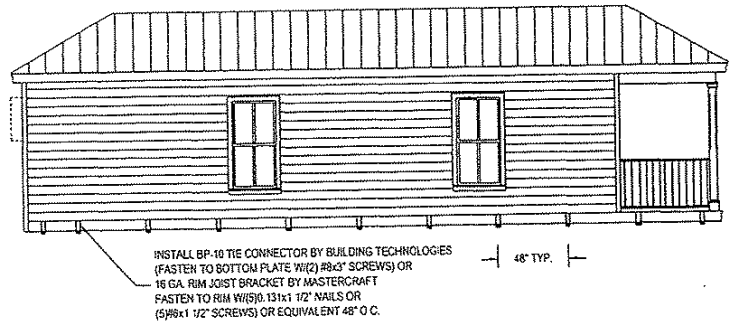

LEFT ELEVATION

NOTE:
1. MAY USE ANY OTHER EQUIVALENT METHODS FOR VERTICAL STRAPS.
2. CONNECTORS SHOWN ARE ONLY FOR TEMPORARY INSTALLS AND MUST BE REMOVED FOR PERMANENT SET UP.

APPROVED BY
AUG 9 - 2007
NTA INC

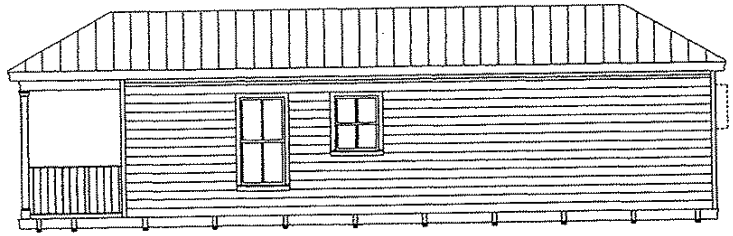

RIGHT ELEVATION

TEMPORARY

NADER TOMASBI
REGISTERED PROFESSIONAL
ENGINEER
16679
07/25/2007
STATE OF MISSISSIPPI

STMS012507 MS MODULAR	Title: Temporary Foundation Tie down Strapping	dti design•tech•inc	Drawn By: . Date: . Revised By: . Date: .	Model No. 1240	Pg. 9E

APPROVED
BY
STATE FIRE MARSHAL'S OFFICE
STATE OF MISSISSIPPI
DATE: 08/13/07 M.G.

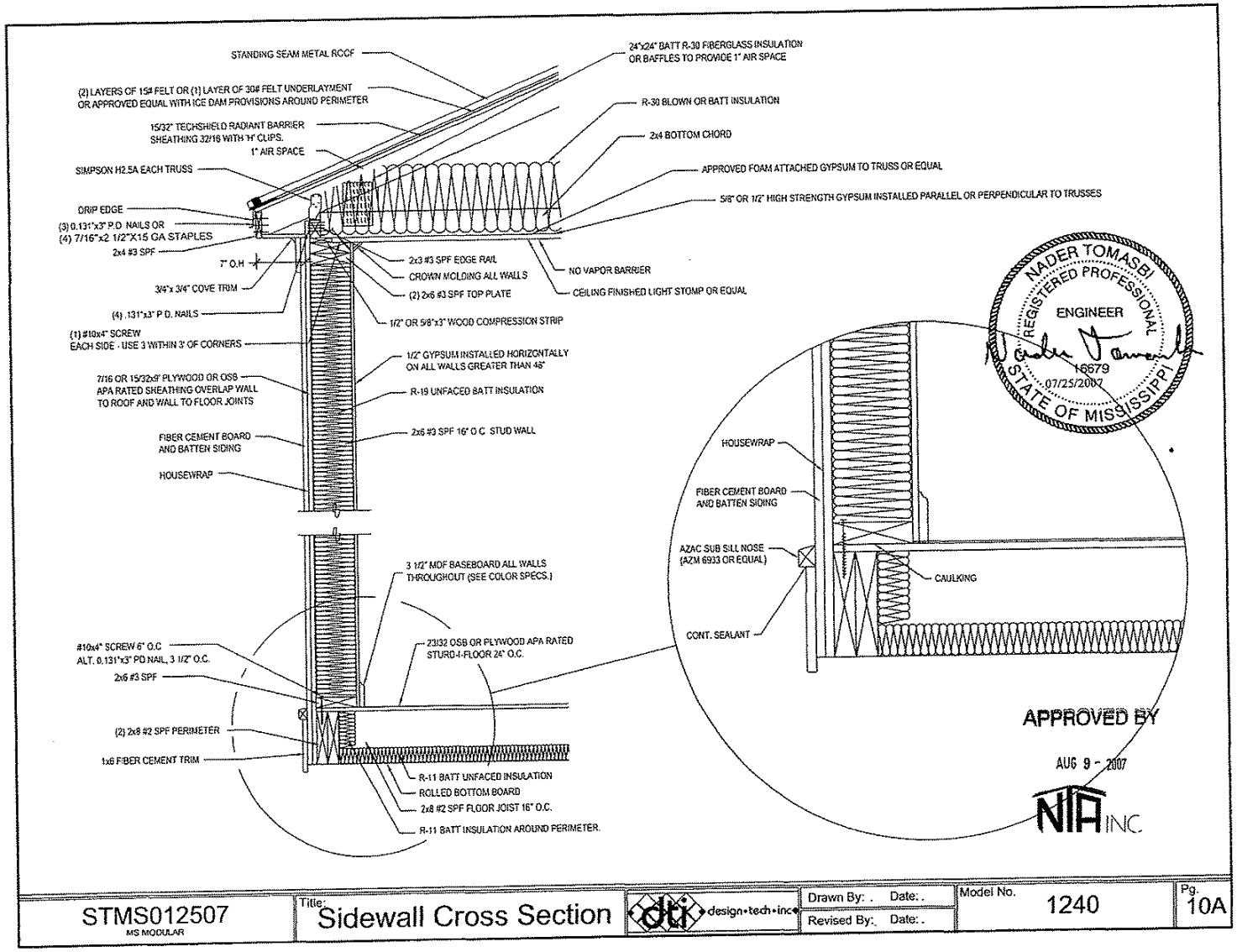

NADER TOMASBI
REGISTERED PROFESSIONAL ENGINEER
16679
07/25/2007
STATE OF MISSISSIPPI

APPROVED BY
AUG 9 - 2007
NTA INC.

STMS012507 MS MODULAR	Title: Sidewall Cross Section	dti design•tech•inc	Drawn By: . Date: . Revised By: . Date: .	Model No. 1240	Pg. 10A

APPROVED
BY
STATE FIRE MARSHAL'S OFFICE
STATE OF MISSISSIPPI
DATE: 08/13/07 M. C.

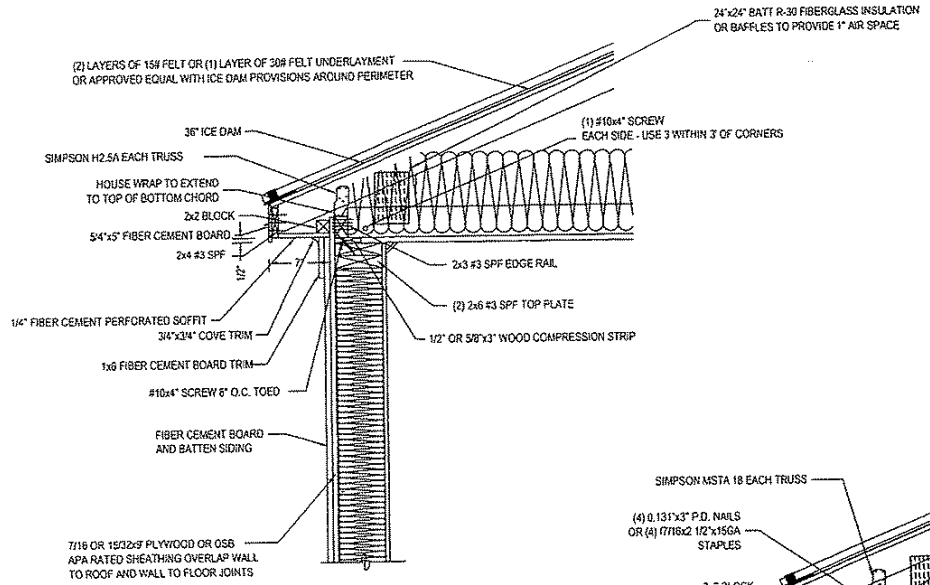

STANDARD SIDEWALL OVERHANG

NOT TO SCALE

APPROVED BY

AUG 9 - 2007

NTA INC

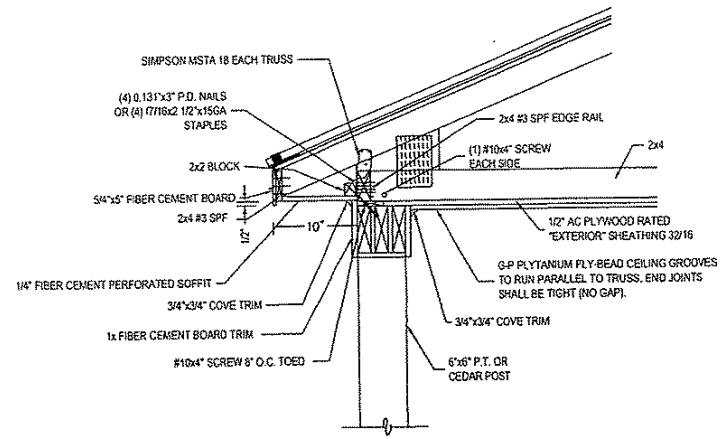

PORCH SIDEWALL OVERHANG

NOT TO SCALE

NADER TOMASBI
REGISTERED PROFESSIONAL ENGINEER
16679
07/25/2007
STATE OF MISSISSIPPI

STMS012507 MS MODULAR	Title: Alternate Cross Section	design+tech+inc	Drawn By: . Date: . Revised By: . Date: .	Model No. 1240	Pg. 10B

3'x6' MAX. WINDOW SIZE x 54.2 PSF=975.2#
SCREWS: 82x1.6x1" PENT. = 131#
975.2/13=7.4 OR 8 SCREWS.

PERIMETER OF SMALLEST WINDOW (2+3)x2x12-120"

120/8=15" O.C.

APPROVED BY STATE FIRE MARSHAL'S OFFICE STATE OF MISSISSIPPI DATE: 01/3/07 MG

APPROVED BY

AUG 9 - 2007

NIA INC.

HOMES INSTALLED IN WIND-DEBRIS REGIONS MUST HAVE PROVISIONS TO PROTECT THE EXTERIOR GLAZING IN WINDOWS AND DOOR. LOCAL OFFICIAL MUST BE CONSULTED TO DETERMINE IF YOUR SPECIFIC AREA IS LOCATED IN WIND-DEBRIS REGIONS. THE PROTECTION FOR EXTERIOR GLAZING MAY BE PROVIDED.

A 7/16" MINIMUM APA RATE SHEATHING SHALL MUST BE PROVIDED. SHEATHING SHALL BE PRECUT SO THEY SHALL BE ATTACHED TO THE FRAMING SURROUNDING THE OPENING CONTAINING THE PRODUCT WITH THE GLAZED OPENING. PANEL SHALL BE PREDRILLED AS REQUIRED FOR THE FASTENING AND ALL REQUIRED HARDWARE SHALL BE PROVIDED.

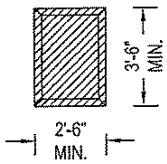

KITCHEN WINDOW
1-REQ.
1x3 EDGES FRAMING SQUARE OR 45° CUT WITH 7/16" OSB COVERING MINIMUM

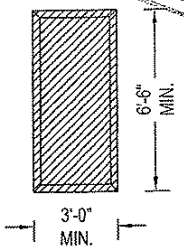

LIVING & DINING ROOM WINDOW
4-REQ.
1x3 EDGES FRAMING SQUARE OR 45° CUT WITH 7/16" OSB COVERING MINIMUM

NOTE:
PRE-ENGINEERED WINDOW/DOOR PROTECTORS MAY BE INSTALL ON-SITE BY OTHERS. (MUST MEET ALL STATE & LOCAL CODE REQUIREMENTS

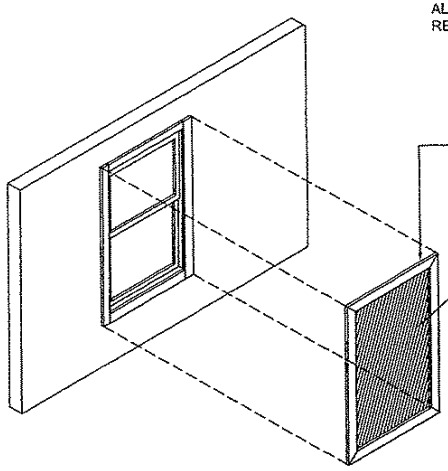

USE #8 SCREWS (1" MIN. PENETRATION INTO RECEIVING MEMBER) 15" O.C. MAX.

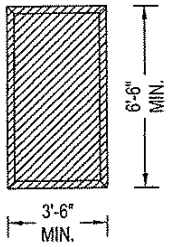

BEDROOM WINDOW
1-REQ.
1x3 EDGES FRAMING SQUARE OR 45° CUT WITH 7/16" OSB COVERING MINIMUM

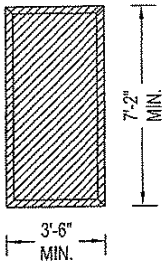

OPTIONAL FRONT DOOR
1-REQ.
1x3 EDGES FRAMING SQUARE OR 45° CUT WITH 7/16" OSB COVERING MINIMUM

WIND BORNE DEBRIS PROTECTION DETAIL

NADER TOMASBI REGISTERED PROFESSIONAL ENGINEER 16679 08/07/2007 STATE OF MISSISSIPPI

FOREST RIVER H. PLANT 3 - 65700 STAE ROAD 19 WAKARUSA, IN 46573	Title: Ship Loose Window Protectors	design•tech•inc	Drawn By: . Date: . Revised By:. Date: .	Model No. 1240	Pg. 11

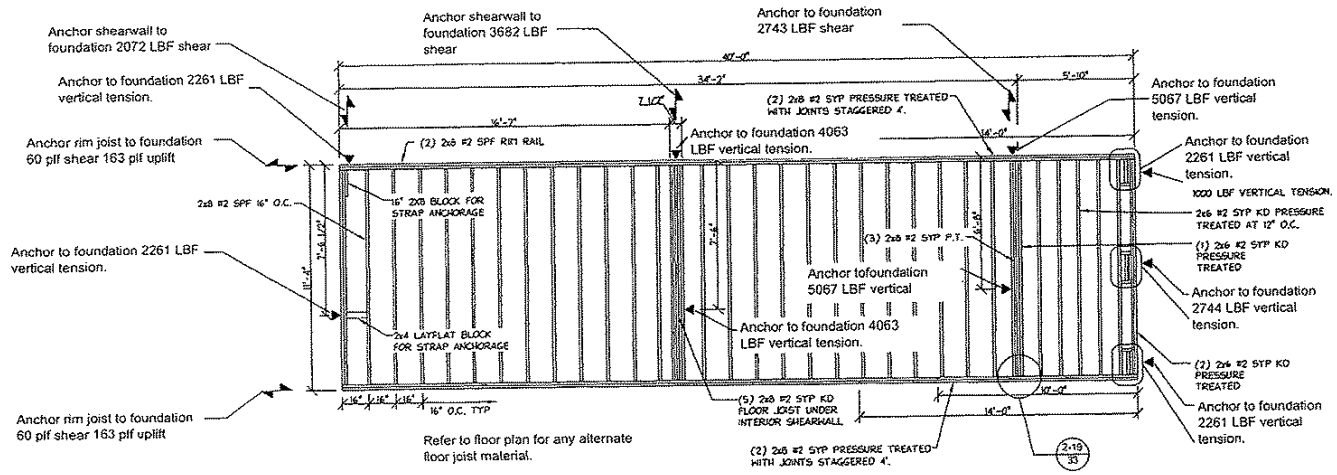

FLOOR FRAMING

SCALE: 3/16"=1'-0"

FRAMING NOTES:

1. PERIMETER RAIL TO TRANSVERSE JOIST (6) .131x3" P.D. NAILS.
2. PERIMETER SPLICE 4x4x20 GA CONNECTOR EACH SIDE OR EQUAL.
3. RIM RAIL MEMBERS FASTENED TOGETHER WITH .131x3" P.D. NAILS 2 ROWS 12" O.C. STAGGERED.
4. 23/32 OSB OR PLYWOOD APA RATED STURD-I-FLOOR 24" O.C. DECKING TO JOIST 7/16x1-3/4x15 GA STAPLE OR .099x2" P.D. NAILS 4" O.C. EDGE 8" O.C. FIELD WITH 100% ADHESIVE.
5. ADHESIVE REQUIRED ON T&G AND PERIMETER RAILS.
6. COMPOSITE DECK BOARD TO JOIST (2) #8x2" PER JOIST (COMPOSITE DECK BOARD TO BE INSTALLED PER MANUFACTURERS INSTRUCTIONS).
7. BOTTOM BOARD (MFG.: SHEPHARD MOBILE FLEX OR EQUAL) FASTENED WITH 1"x3/4"x16 GA STAPLES 4" O.C.
8. ALL FASTENERS AND CONNECTOR PLATES INTO TREATED LUMBER MUST BE STAINLESS STEEL OR GALVANIZED STEEL APPROVED FOR TREATED LUMBER.
9. BOTTOM BOARD AND INSULATION NOT INSTALLED IN PORCH AREA.
10. MULTIPLE JOIST FASTENED TOGETHER WITH (2) ROWS OF .131"x3" P.D. NAILS, OR 7/16"x2 1/2"x15GA. STAPLES 6" O.C. WITH 100% ADHESIVE.
11. NOTCHES IN JOIST TO BE PER IRC R502.8

APPROVED BY

AUG 9 - 2007

NTA INC

NADER TOMASSI REGISTERED PROFESSIONAL ENGINEER 16679 07/25/2007 STATE OF MISSISSIPPI

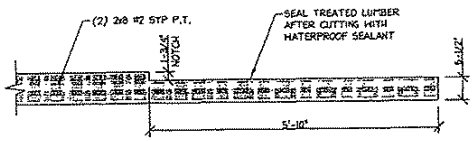

EDGE RAIL NOTCH AT PORCH

NTS

Harrison County - Provide that wood joists or the bottom of a wood structural floor when closer than 18" or wood griders when closer than 12" to the exposed ground in the ground in crawl spacs or unexcavated area located within the periphery of the building foundation shall be treated.

dti ◆design·tech·inc◆

ROOF FRAMING DETAIL
PAGE 12A

APPROVED
BY
THE MARSHALL'S OFFICE
HARRISON COUNTY, MISSISSIPPI
08/30/07 MG

APPROVED
BY
STATE FIRE MARSHALS OFFICE
STATE OF MISSISSIPPI
DATE: 08/3/07

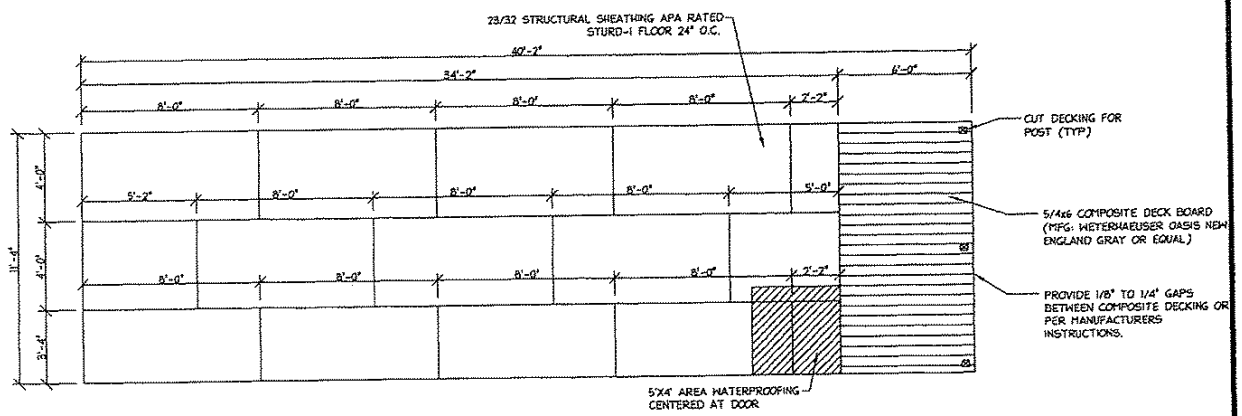

FLOOR DECKING

FRAMING NOTES:

1. PERIMETER RAIL TO TRANSVERSE JOIST (8) .131x3" P.D. NAILS.
2. PERIMETER SPLICE 4x4x20 GA CONNECTOR EACH SIDE OR EQUAL.
3. DOUBLE JOIST .131x3" P.D. NAILS 2 ROWS 12" O.C. STAGGERED.
4. 23/32 OSB OR PLYWOOD APA RATED STURD-I-FLOOR 24" O.C. DECKING TO JOIST 7/16x1-3/4x15 GA STAPLE OR .099x2" P.D. NAILS 4" O.C. EDGE 8" O.C. FIELD WITH 100% ADHESIVE.
5. ADHESIVE REQUIRED ON T&G AND PERIMETER RAILS.
6. COMPOSITE DECK BOARD TO JOIST (2) #8x2" SCREWS PER JOIST (COMPOSITE DECK BOARD TO BE INSTALLED PER MANUFACTURERS INSTRUCTIONS).
7. BOTTOM BOARD (MFG.: SHEPHARD MOBILEFLEX OR EQUAL) FASTENED WITH 1"x3/4"x16 GA STAPLES 4" O.C.
8. ALL FASTENERS AND CONNECTORS INTO TREATED LUMBER MUST BE STAINLESS STEEL OR GALVANIZED STEEL APPROVED FOR TREATED LUMBER.
9. BOTTOM BOARD AND INSULATION NOT INSTALLED IN PORCH AREA.
10. MULTIPLE JOIST FASTENED TOGETHER WITH (2) ROWS OF .131"x3" P.D. NAILS. OR 7/16"x2 1/2"x15GA. STAPLES 6" O.C. WITH 100% ADHESIVE.
11. ALL DECKING SEAMS MUST BE SANDED UNDER LINOLEUM OR TILE

APPROVED BY

AUG 9 - 2007

NTA INC

NADER TOMASBI
REGISTERED PROFESSIONAL
ENGINEER
16679
07/25/2007
STATE OF MISSISSIPPI

dti ◆design·tech·inc◆

Floor decking layout
Page 12B

APPROVED
BY
STATE FIRE MARSHALS OFFICE
STATE OF MISSISSIPPI
DATE: 08/13/07 MG

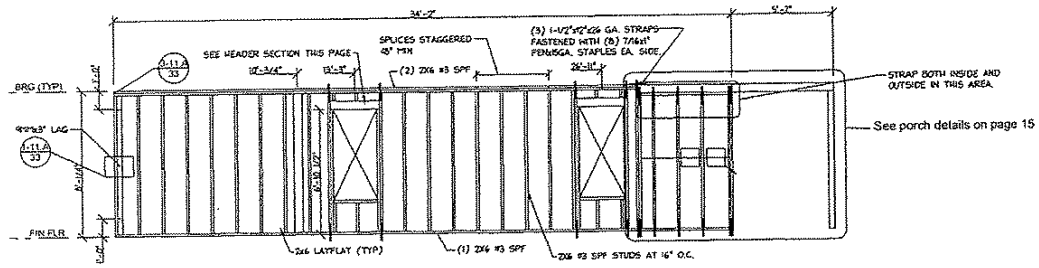

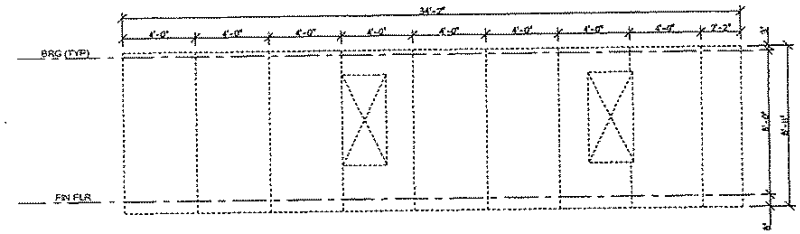

APPROVED BY

AUG 9 - 2007

NTA INC.

NADER TOMASBI
REGISTERED PROFESSIONAL
ENGINEER
16679
07/25/2007
STATE OF MISSISSIPPI

WALL FRAMING NOTES:

1. FASTEN WALL TO FLOOR WITH (3) #8x3" SCREWS OR (3) .131"x3" P.D. NAILS EVERY 16" O.C.
2. FASTEN 1/2" DRYWALL TO STUDS WITH #6x1 1/4" DRY WALL SCREWS OR 1-5/8" DRYWALL NAILS 8" O.C. EDGES AND #6x1-1/4" DRYWALL SCREWS 16" O.C. FIELD WITH 100% ADHESIVE
2.A 1/2" DRYWALL INSTALLED HORIZONTAL ON ALL WALLS GREATER THAN 48".
3. FASTEN TOP AND BOTTOM PLATES TO STUDS WITH (5) .131"x3" P.D. NAILS OR (7) 7/16"x2-1/2"x15 GAUGE STAPLES
4. FASTEN DOUBLE TOP PLATES WITH .131"x3": P.D. NAILS OR 7/16"x2-1/2"x15 GAUGE STAPLES 6" O.C.
5. FASTEN 7/16" OSB OR 15/32" PLYWOOD RATED SHEATHING 32/16" INDEX TO STUDS WITH 7/16"x1-1/2" 15 GAUGE STAPLES 6" O.C. EDGES AND FIELD
6. 7/16" OSB OR 15/32" PLYWOOD 4'x9' RATED SHEATHING 32/16 INDEX CONTINUOUS OVER JOINTS BETWEEN FLOOR/WALL AND WALL/ROOF EXCEPT AT FRONT ENDWALL.
7. FASTENING OF SHEATHING TO PERIMETER FLOOR JOIST AND ROOF EDGE RAIL 7/16"x1-1/2"x15 GAUGE STAPLES 3"O.C.
8. FASTEN SHEATHING TO ENDWALLS AND WITHIN 4' OF CORNER ON SIDE WALLS WITH 7/16"x2-1/2"x15 GAUGE STAPLES 3" O.C. EDGE, 6" O.C. FEILD.
9. HEADERS AND SILLS FASTEN TO STUD WITH (5) .131"x3" P.D. NAILS OR (7) 7/16"x2-1/2"x15 GAUGE STAPLES EACH END EACH MEMBER.
10. MULTIPLE STUDS FASTEN ON TOGETHER WITH .131"x3" P.D. NAILS OR 7/16"x2-1/2"x15 GAUGE STAPLE 6" O.C.
11. WALL TO WALLS FASTENED TOGETHER WITH .131"x3" P.D. NAILS OR #8x3" SCREW 10" O.C PLUS (3) 1/2"x3" LAGS (ONE LAG 1" FROM TOP AND BOTTOM OF STUD AND ONE LAG AT MID-POINT).
12. STRAP EACH STUD TO RIM JOIST AT DOORS AND WINDOWS (SIDEWALL) WITH 1-1/2"x12"x26 GAUGE. STRAP FASTENERS WITH (8) 7/16"x1" PDN #15 GA STAPLES OR (8) .120x1-1/2" P.D. NAIL EACH END AND AT 2X6 HEADER AT PORCH AS SHOWN.
13. HOUSE WRAP INSTALLED PER MANUFACTURERS INSTRUCTIONS.
14. EXTERIOR SIDING INSTALLED PER MANUFACTURERS INSTRUCTIONS FOR HIGH WIND
15. WINDOWS INSTALLED PER MANUFACTURERS INSTRUCTIONS FOR DP RATING 54.2 PSN.
16. IMPACT RESISTANCE MUST BE MET FOR WINDOWS AND DOORS.
17. SPLICE BOTTOM PLATE AND LOWER TOP PLATE 3"X5"X20" GAUGE CONNECTOR PLATE EACH SIDE OR EQUAL.
18. FASTEN ENDWALL TO SIDEWALL TOP PLATES WITH 3"x6"x.055 PLATE WITH (4) .131"x3" P.D. NAILS EACH SIDE EQUAL.
19. NOTCHING IN STUDS SHALL BE PER IRC R602.6

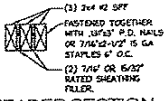

HEADER SECTION
SCALE: NONE

dti ◆design·tech·inc◆

SIDEWALL DETAIL
PAGE 12C

APPROVED
BY
STATE FIRE MARSHAL'S OFFICE
STATE OF MISSISSIPPI
DATE: 08/13/07 MG

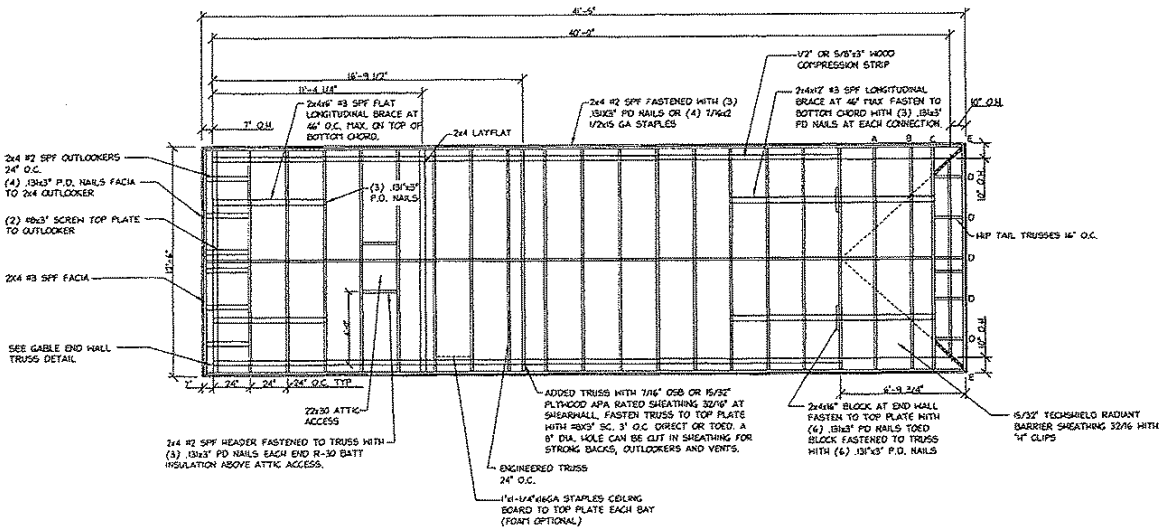

ROOF FRAMING - PARK MODEL 1A ELEVATION A

1. 7/16" OSB OR 15/32" PLYWOOD APA RATED SHEATHING 32/16" ROOF DECKING FASTENED TO TRUSSES WITH 7/16"cl 1/2"x15 GA STAPLES 3" O.C.
2. 7/16" OSB OR 15/32" PLYWOOD APA RATED SHEATHING 32/16" FASTENED TO END TRUSSES AT SHEARWALL AND AT INTERIOR SHEARWALL WITH 7/16"cl 1/2"x15 GA STAPLES 3" O.C. TOP AND BOTTOM CHORD.
3. 1/2" OR 5/8"x3" WOOD COMPRESSION STRIP ON TOP OF SIDEWALLS ONLY (CUT BACK 1/2" OR 5/8" GYPSUM CEILING BOARD)

APPROVED BY

AUG 9 - 2007

NTA INC

NADER TOMASBI
REGISTERED PROFESSIONAL
ENGINEER
16679
07/25/2007
STATE OF MISSISSIPPI

dti ◆design·tech·inc◆

ROOF FRAMING DETAIL
PAGE 12D

APPROVED
BY
STATE FIRE MARSHALS OFFICE
STATE OF MISSISSIPPI
DATE: 08/30/07 MG

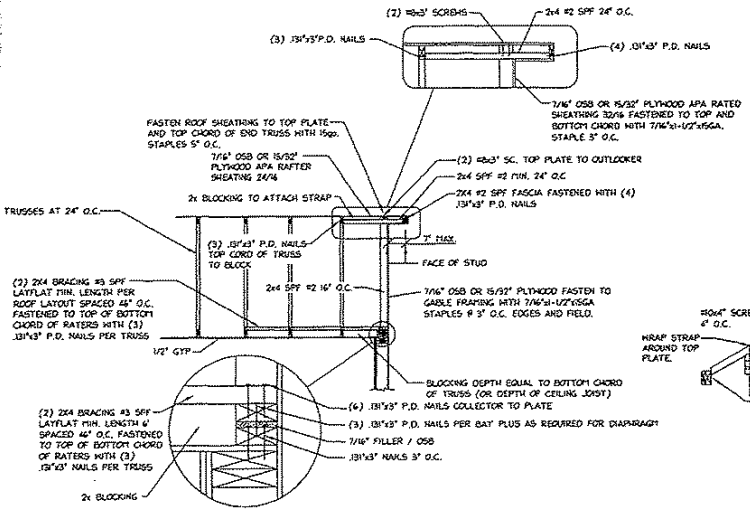

GABLE END BLOCKING
AND BRACING DETAIL (REAR END DETAIL)
SCALE: NONE

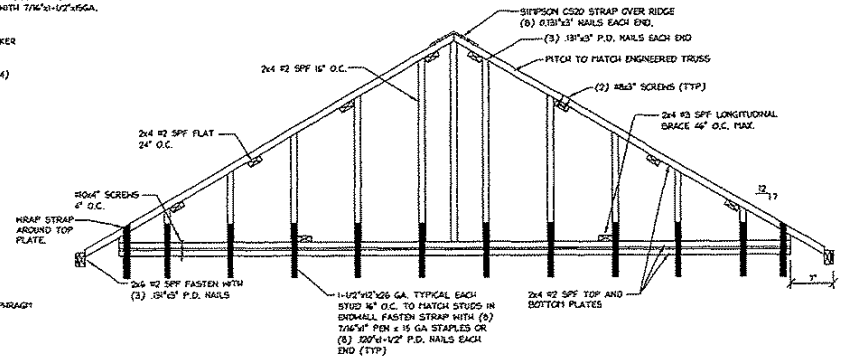

GABLE END WALL TRUSS FRONT VIEW
SCALE: NONE

APPROVED BY
AUG 9 - 2007
NIA INC.

NADER TOMASBI
REGISTERED PROFESSIONAL ENGINEER
16679
07/25/2007
STATE OF MISSISSIPPI

dti design • tech • inc

GABLE ENDWALL DETAIL
PAGE 12E

APPROVED
BY
STATE FIRE MARSHALS OFFICE
STATE OF MISSISSIPPI
DATE: 08/13/07 MC

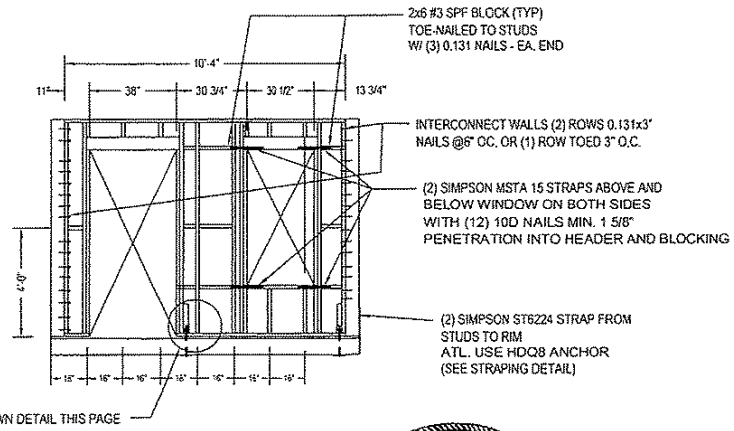

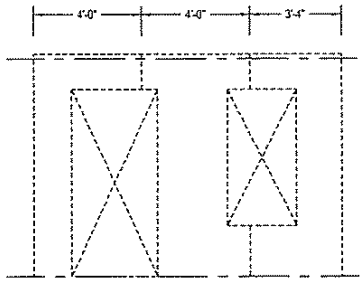

7/16" APA RATED SHEATHING WITH STUDS AT 16" O.C. OR 15/32" APA RATED SHEATHING ON BOTH FACES, WITH .131x3" NAILS AT 4" O.C. EDGE AND 6" O.C FEILD, 15GA STAPLES 3" O.C PANEL FORCE 633 PLF.

NADER TOMASBI
REGISTERED PROFESSIONAL
ENGINEER
16679
07/25/2007
STATE OF MISSISSIPPI

APPROVED BY

AUG 9 - 2007

NTA INC

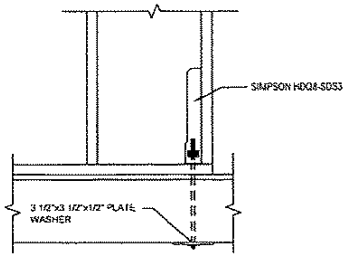

ALTERNATIVE
TIE DOWN DETAIL
SCALE: NONE

WALL FRAMING NOTES:

1. FASTEN BOTTOM PLATE TO JOIST WITH .131x3" NAILS OR #8x3" SCREWS AT 3" O.C. (16 PER BAY)
2. FASTEN 1/2" DRYWALL TO STUDS WITH #6 X 1 1/4" DRY WALL SCREWS OR 1 5/8" DRYWALL NAILS 8"O.C. EDGES 16" O.C. FIELD WITH 80% ADHESIVE
3. FASTEN TOP AND BOTTOM PLATES TO STUDS WITH (3) .131X3"P.D. NAILS OR (4) 7/16 X 21/2 X 15 GAUGE STAPLES
4. FASTEN DOUBLE TOP PLATES WITH 0.131 X 3" P.D. NAILS 6" O.C. OR 7/16 X 2 1/2 X 15 GAUGE STAPLES 4" O.C.
5. FASTENING OF SHEATHING TO PERIMETER FLOOR JOIST AND ROOF EDGE RAIL 7/16 X 1 1/2 X 15 GAUGE STAPLES 3" O.C.
6. FASTEN SHEATHING TO ENDWALLS AND WITHIN 4' OF CORNER ON SIDE WALLS WITH 7/16 X 2 1/2 X 15 GAUGE STAPLES 3" O.C. EDGE, 6" O.C. FIELD MIN.
7. HEADERS AND SILLS FASTEN TO STUD WITH (5) .131X3" P.D. NAILS OR (7) 7/16 X 2 1/2 X 15 GAUGE STAPLES EACH AND EACH MEMBER.
8. MULTIPLE STUDS FASTEN ON TOGETHER WITH .131 X 3" P.D. NAILS OR 7/16 X 2 1/2 X 15 GAUGE STAPLE 2" O.C.
9. WALL TO WALLS FASTENED TOGETHER WITH .131 X 3" P.D. NAILS OR #8 X 3" SC. 10" O.C.
10. STRAP EACH STUD TO RIM JOIST AT DOORS AND WINDOWS WITH 1 1/2 X 12" X 26 GAUGE. STRAP FASTENERS WITH (6) 7/16 X 1 PEN X 15 GA STAPELS OR (8) .120 X 1 1/2 P.D. NAIL EACH END.
11. HOUSE WRAP INSTALLED PER MANUFACTURERS INSTRUCTIONS.
12. EXTERIOR SIDING INSTALLED PER MANUFACTURERS INSTRUCTIONS FOR HIGH WIND
13. WINDOWS INSTALLED PER MANUFACTURERS INSTRUCTIONS FOR DP RATING 52.5 MIN.
14. SPLICE BOTTOM PLATE AND LOWER TOP PLATE 3X5X20 GAUGE CONNECTOR PLATE EACH SIDE OR 12" 2x6 BLOCK.
15. FASTEN ENDWALL TO SIDEWALL TOP PLATES WITH 3"x6"x.035 PLATE WITH (4) .13x3" NAILS EACH SIDE EQUAL.

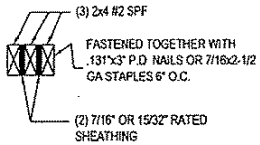

HEADER SECTION
SCALE: NONE

STMS012507 MS MODULAR	Title: Front Shearwall	dti design•tech•inc	Drawn By: . Date: . Revised By: . Date: .	Model No. 1240	Pg. 13A

STATE OF MISSISSIPPI
STATE FIRE MARSHAL'S OFFICE
APPROVED BY
DATE: 08/13/07 MC

WALL FRAMING NOTES:

1. FASTEN WALL TO FLOOR AND WALL TO CEILING WITH (7) # 8X3" SCREWS PER BAY
2. FASTEN 1/2" DRYWALL TO STUDS WITH #6 X 1 1/4" DRY WALL SCREWS OR 1 5/8" DRYWALL NAILS 8" O.C. EDGES 16" O.C. FIELD WITH 100% ADHESIVE
3. FASTEN TOP AND BOTTOM PLATES TO STUDS WITH (3) 0.131x3" P.D. NAILS OR (3) 7/16"x2 1/2"x15 GAUGE STAPLES
4. HEADERS FASTEN TO STUD WITH (3) 0.131x3" P.D. NAILS OR (3) 7/16"x2 1/2"x15 GAUGE STAPLES EACH AND EACH MEMBER.
5. WALS TO WALLS FASTENED TOGETHER WITH 0.131x3" P.D. NAILS OR #8x3" SC. 4" O.C. DIRECT OR TOED.

7/16" APA RATED SHEATHING WITH STUDS AT 16" O.C. OR 15/32" APA RATED SHEATHING ON ONE SIDE, WITH 0.131x3" NAILS AT 3" O.C. EDGE AND 6" O.C. FIELD OR 15 GA STAPLES 2" O.C. AND 6" FIELD. STAGGER NAILS IN DOUBLE STUDS AT PANEL EDGES SHEARWALL (DOUBLE STUDS REQUIRED ONLY W/ 15 GA. STAPLES). PANEL FORCE 508 PL.

NADER TOMASBI
REGISTERED PROFESSIONAL ENGINEER
16679
08/07/2007
STATE OF MISSISSIPPI

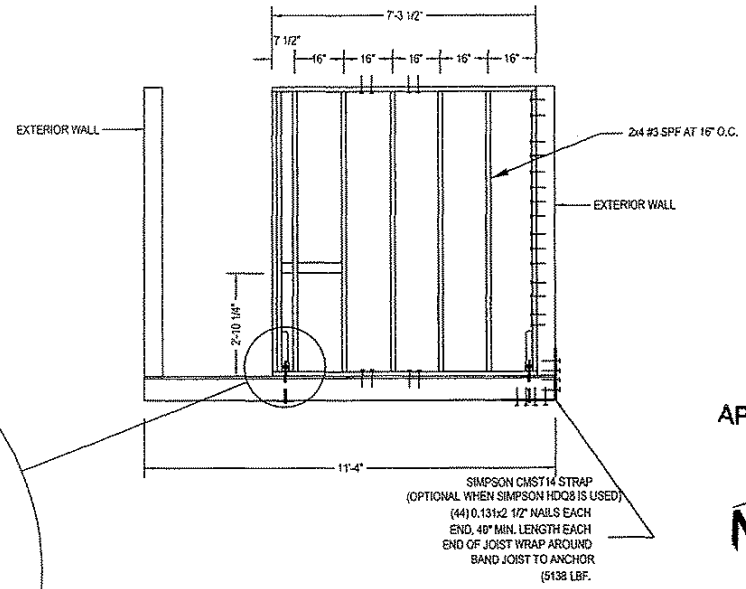

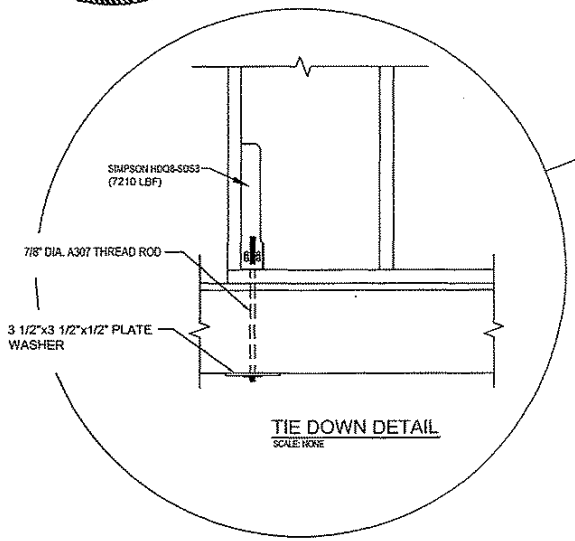

TIE DOWN DETAIL
SCALE: NONE

APPROVED BY
AUG 9 - 2007
NTA INC

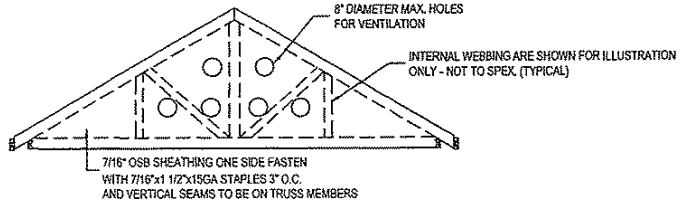

INTERIOR SHEARWALL TRUSS
SCALE: NONE

FOREST RIVER H. PLANT 3 - 66700 STAE ROAD 19 WAKARUSA, IN 46573	Title: Interior Shearwall	dti design•tech•inc	Drawn By: . Date: . Revised By:. Date: .	Model No. 1240	Pg. 13B

7/16" OSB APA RATED SHEATHING WITH STUDS AT 16" O.C. OR 15/32 PLYWOOD RATED SHEATHING WITH 0.131x3" NAILS AT 6" O.C. EDGE AND 6" O.C. FIELD OR 15 GAGE STAPLES AT 4" O.C. EDGE AND 6" O.C. FIELD. SHEARWALL PANEL FORCE IS 276 PLF.

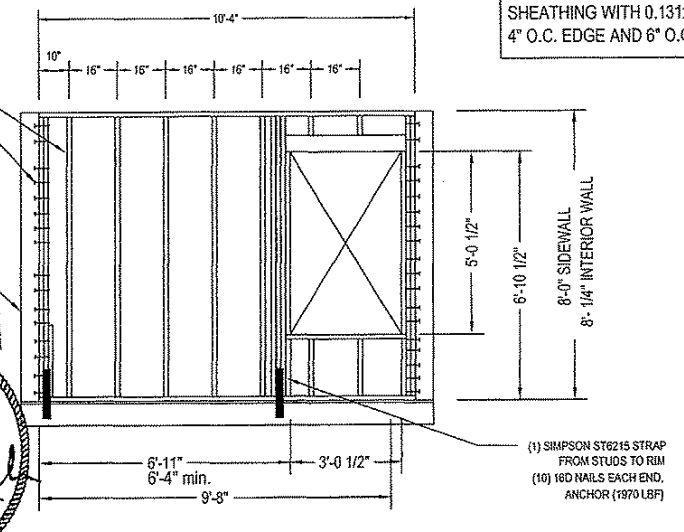

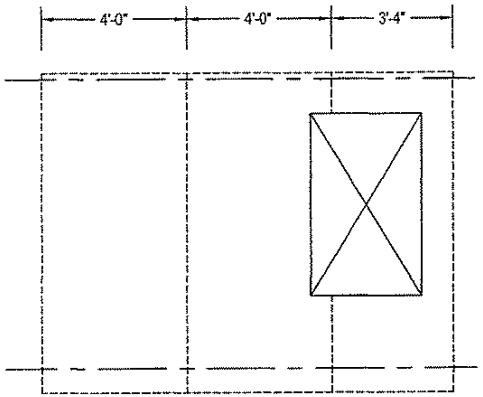

STATE FIRE MARSHALL'S OFFICE
STATE OF MISSISSIPPI
APPROVED
DATE: 08/13/07

NADER TOMASBI
REGISTERED PROFESSIONAL ENGINEER
16679
08/09/2007
STATE OF MISSISSIPPI

APPROVED BY
AUG 9 - 2007
NIA INC

STUDS WILL BE UNDER WINDOW

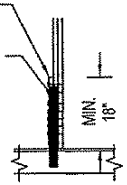

WALL FRAMING NOTES:

1. FASTEN BOTTOM PLATE TO JOIST WITH .131x3" NAILS OR #8x3" SCREWS AT 3" O.C. (16 PER BAY)
2. FASTEN 1/2" DRYWALL TO STUDS WITH #6 X 1 1/4" DRY WALL SCREWS OR 1 5/8" DRYWALL NAILS 8"O.C. EDGES 16" O.C. FIELD WITH 80% ADHESIVE
3. FASTEN TOP AND BOTTOM PLATES TO STUDS WITH (3) .131X3"P.D. NAILS OR (4) .7/16 X 21/2 X 15 GAUGE STAPLES
4. FASTEN DOUBLE TOP PLATES WITH 0.131 X 3" P.D. NAILS 6" O.C. OR 7/16 X 2 1/2 X 15 GAUGE STAPLES 4" O.C.
5. FASTENING OF SHEATHING TO PERIMETER FLOOR JOIST AND ROOF EDGE RAIL 7/16 X 1 1/2 X 15 GAUGE STAPLES 3" O.C.
6. FASTEN SHEATHING TO ENDWALLS AND WITHIN 4' OF CORNER ON SIDE WALLS WITH 7/16 X 2 1/2 X 15 GAUGE STAPLES 3" O.C. EDGE, 6" O.C. FEILD MIN.
7. HEADERS AND SILLS FASTEN TO STUD WITH (5) .131X3" P.D. NAILS OR (7) 7/16 X 2 1/2 X 15 GAUGE STAPLES EACH AND EACH MEMBER.
8. MULTIPLE STUDS FASTEN ON TOGETHER WITH .131 X 3" P.D. NAILS OR 7/16 X 2 1/2 X 15 GAUGE STAPLE 2" O.C. OR #8x3" SCREW
9. WALL TO WALLS FASTENED TOGETHER WITH .131 X 3" P.D. NAILS OR #8 X 3" SC. 10" O.C.
10. STRAP EACH STUD TO RIM JOIST AT DOORS AND WINDOWS WITH 1 1/2 X 12" X 26 GAUGE. STRAP FASTENERS WITH (8) 7/16 X 1 PEN X 15 GA STAPELS OR (8) .120 X 1 1/2 P.D. NAIL EACH END.
11. HOUSE WRAP INSTALLED PER MANUFACTURERS INSTRUCTIONS.
12. EXTERIOR SIDING INSTALLED PER MANUFACTURERS INSTRUCTIONS FOR HIGH WIND
13. WINDOWS INSTALLED PER MANUFACTURERS INSTRUCTIONS FOR DP RATING 52.5 MIN.
14. SPLICE BOTTOM PLATE AND LOWER TOP PLATE 3X5X20 GAUGE CONNECTOR PLATE EACH SIDE OR 12" 2x6 BLOCK.
15. FASTEN ENDWALL TO SIDEWALL TOP PLATES WITH 3"x6"x.035 PLATE WITH (4) .13x3" NAILS EACH SIDE EQUAL.

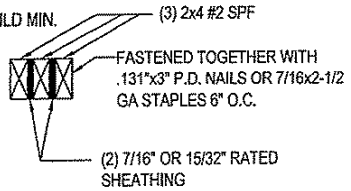

HEADER SECTION

SCALE: NONE

Forest River H. Plant 3 -66700 State Road 19 Wakarusa IN 46573	Title: Rear Shearwall	dti design•tech•inc	Drawn By: . Date: . Revised By: . Date: .	Model No. 1240	Pg. 13C

APPROVED BY
STATE FIRE MARSHAL'S OFFICE
STATE OF MISSISSIPPI
DATE: 08/13/07 MC

APPROVED BY

AUG 9 - 2007

NTA INC

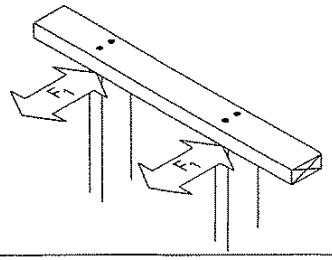

CONNECTION		
PARAMETERS	FASTENER (MINIMUM LENGTH AND DIAMETER OR STAPLE SIZE)	QUANTITY PER CONNECTION OR SPACING
		136" FLOOR
STUD SPACING = 16" O.C.	3"x0.131" P.D. NAIL	3
	2 1/2"x15 GA. STAPLE	4

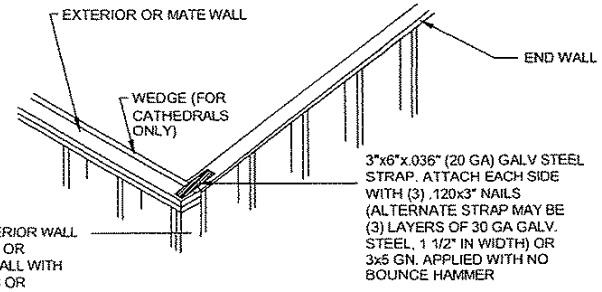

EXTERIOR WALL OR MATE WALL

SCALE: NONE

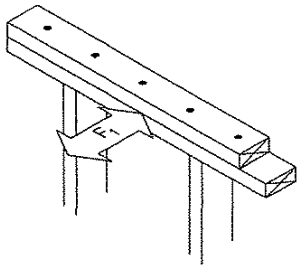

CONNECTION		
PARAMETERS	FASTENER (MINIMUM LENGTH AND DIAMETER OR STAPLE SIZE)	QUANTITY PER CONNECTION OR SPACING
		136" FLOOR
	3"x0.131" P.D. NAIL	6" O.C.
	2 1/2"x15 GA. STAPLE	4" O.C.

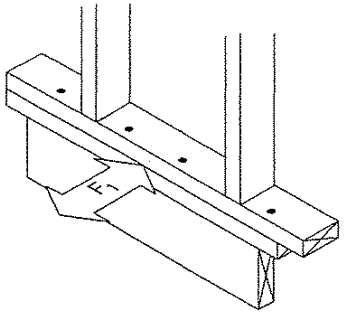

NADER TOMASSI
REGISTERED PROFESSIONAL
ENGINEER
16679
07/25/2007
STATE OF MISSISSIPPI

CONNECTION		
PARAMETERS	FASTENER (MINIMUM LENGTH AND DIAMETER OR STAPLE SIZE)	QUANTITY PER CONNECTION OR SPACING
		136" OR 168" FLOOR
STUD SPACING = 16" O.C.	#8x3" SCREW	3 PER BAY
	3"x0.131" P.D. NAIL	3 PER BAY
	2 1/2"x15 GA. STAPLE	4 PER BAY

CONNECTION	PARAMETERS		QUANTITY PER CONNECTION OR SPACING
CORNER STUDS SIDEWALL/ENDWALL INTERSECTION 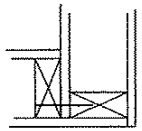	ALL LOCATIONS	3"x0.131" P.D. NAIL	16" O.C.
		2 1/2"x15 GA. STAPLE	10" O.C.
			SEE SHEARWALL DETAILS
DOUBLE STUDS OR JACK TO JAMB STUDS 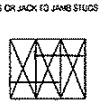	ALL LOCATIONS	3"x0.131" P.D. NAIL	8" O.C.
		2 1/2"x15 GA. STAPLE	5" O.C.

STMS012507 MS MODULAR	Title: Connection Details	dti design•tech•inc	Drawn By: . Date: . Revised By: . Date: .	Model No. 1240	Pg. 14A

APPROVED
BY
STATE FIRE MARSHAL'S OFFICE
STATE OF MISSISSIPPI
DATE: 08/13/07 MC

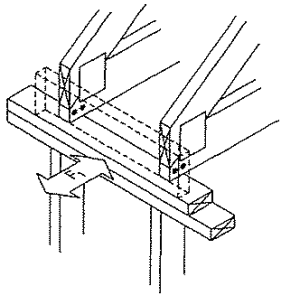

ALTERNATE CONNECTION		
PARAMETERS	FASTENER (MINIMUM LENGTH AND DIAMETER OR STAPLE SIZE)	QUANTITY PER CONNECTION OR SPACING
		136" FLOOR
TRUSS SPACING = 24" O.C.	#10x4" SCREW	1 EACH SIDE OF TRUSS TO TOP PLATE
	#10x4" SCREW	FROM RAIL TO TOP PLATE, EVERY 6"

CONNECTION		
PARAMETERS	FASTENER (MINIMUM LENGTH AND DIAMETER OR STAPLE SIZE)	QUANTITY PER CONNECTION OR SPACING
		136" FLOOR
TRUSS SPACING = 16" O.C.	3"x0.131" P.D. NAIL	3
	#10x4" SCREW	2 AT INTERIOR & 3 WITHIN 3' OF CORNERS

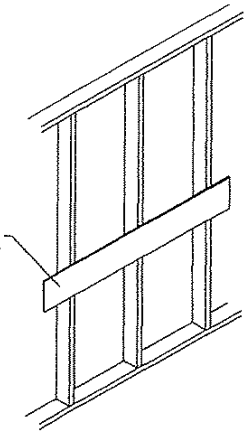

BELTRAIL DETAIL

APPROVED BY

AUG 9 - 2007

NTA INC.

NADER TOMASBI
REGISTERED PROFESSIONAL
ENGINEER
16679
07/25/2007
STATE OF MISSISSIPPI

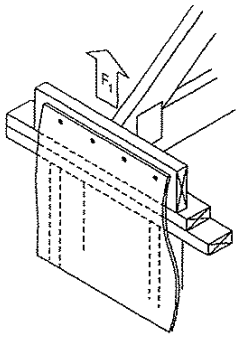

CONNECTION		
PARAMETERS	FASTENER (MINIMUM LENGTH AND DIAMETER OR STAPLE SIZE)	QUANTITY PER CONNECTION OR SPACING
		136" FLOOR
SHEATHING TYPE: 15/32" APA RATED PLYWOOD OR OSB	3"x0.131" P.D. NAIL	2" O.C.
	1 1/2"x15 GA. STAPLE	2" O.C.
	1 1/2"x16 GA. STAPLE	2" O.C.

STMS012507 MS MODULAR	Title: Connection Details	design•tech•inc	Drawn By: . Date: . / Revised By: . Date: .	Model No. 1240	Pg. 14B

APPROVED
BY
STATE FIRE MARSHAL'S OFFICE
STATE OF MISSISSIPPI
DATE: 08/13/07 MG

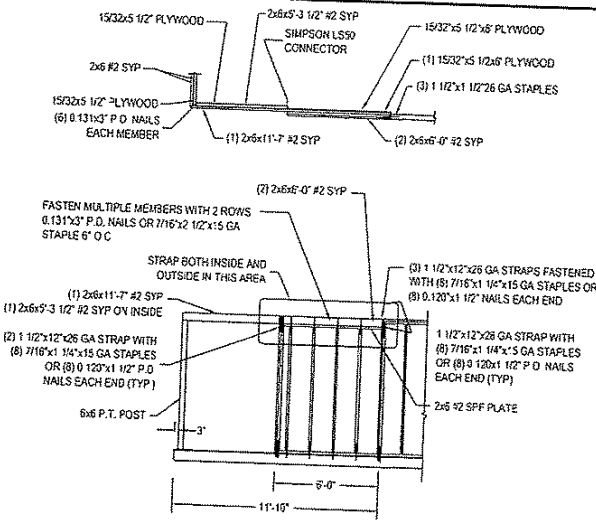

PORCH FRAMING DETAIL
SCALE: NONE

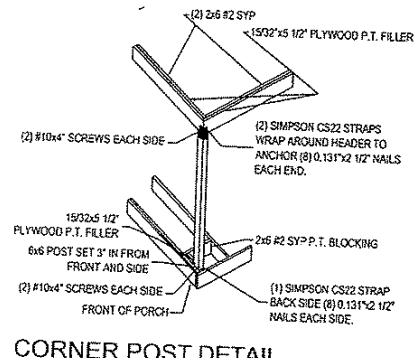

CORNER POST DETAIL
SCALE: NONE

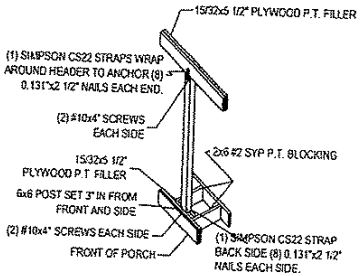

MIDDLE POST DETAIL
SCALE: NONE

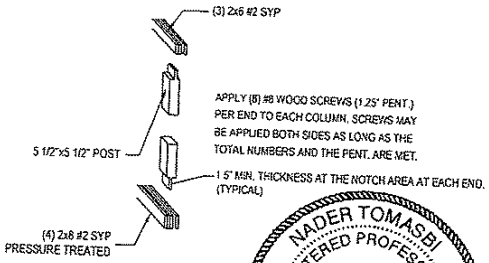

ALT. POST DETAIL
SCALE: NONE

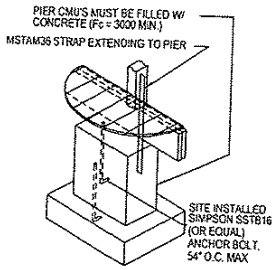

POST END DETAIL
APPLIES TO PERMANENT HOME SET

NADER TOMASBI
REGISTERED PROFESSIONAL ENGINEER
16679
07/25/2007
STATE OF MISSISSIPPI

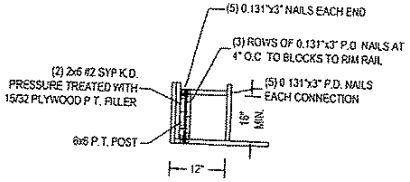

BLOCKING FOR POST CORNER DETAIL
SCALE: NONE

APPROVED BY
NOTE:
ALL PLYWOOD 15/32 APA RATED SHEATHING 32/16
ALL EXPOSED PLYWOOD PRESSURE TREATED

AUG 9 - 2007

NIA INC.

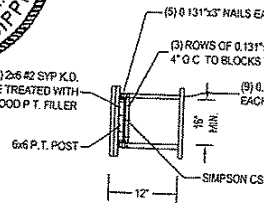

BLOCKING FOR POST MIDDLE DETAIL
SCALE: NONE

STMS012507 MS MODULAR	Title: Porch Framing Details	design•tech•inc	Drawn By: . Date: . Revised By: . Date: .	Model No. 1240	Pg. 15

HEADER DETAIL

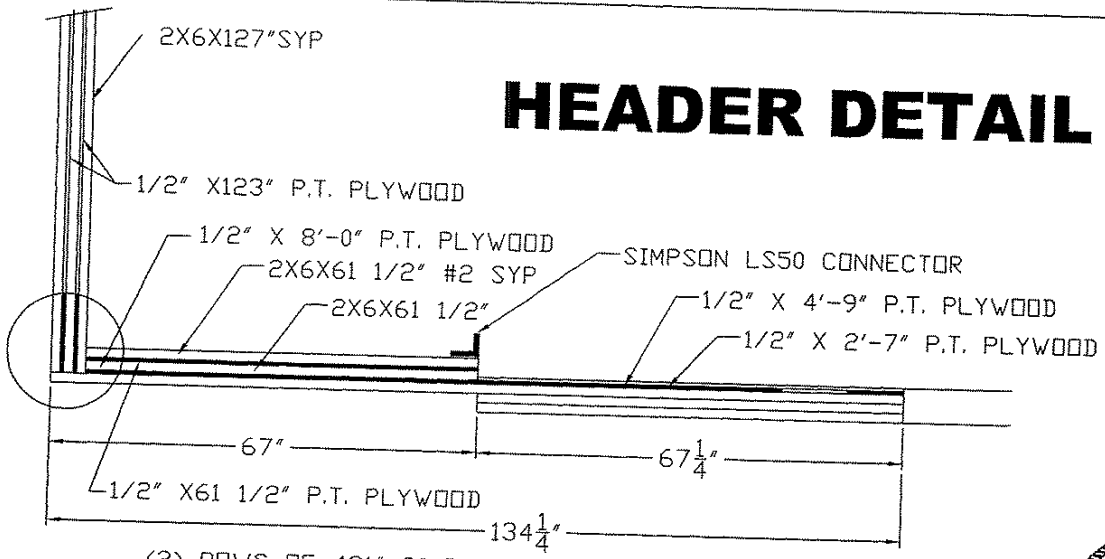

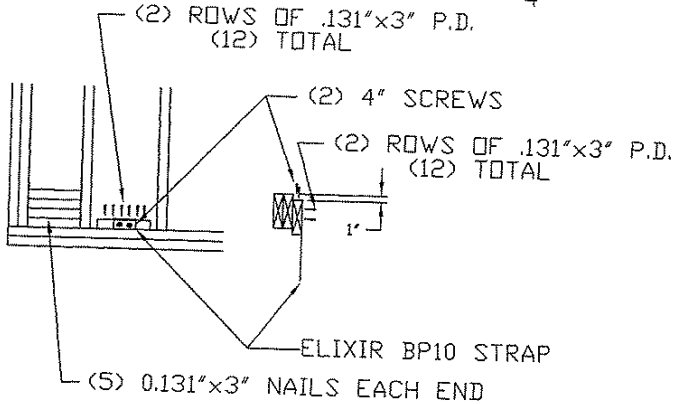

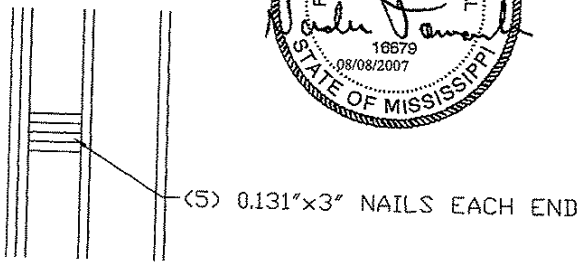

BLOCKING FOR MIDDLE POST

REFER TO 1240 MS PARK MODEL PACKAGE
FOR INFORMATION NOT NOTED IN THIS PAGE.

FOR FASTENING SCHEDULE SEE FLOOR DRAWING

FLOOR DETAILS

FOREST RIVER HOUSING

APPROVED BY
AUG 9 - 2007
NTA INC

NADER TOMASBI
REGISTERED PROFESSIONAL
ENGINEER
16679
08/08/2007
STATE OF MISSISSIPPI

STATE FIRE MARSHAL'S OFFICE
STATE OF MISSISSIPPI
APPROVED
DATE: 08/13/07 MC