STATE OF MISSISSIPPI

GEORGE DALE
Commissioner of Insurance
State Fire Marshal

LEE HARRELL
Deputy Commissioner of Insurance

RICKY DAVIS
State Chief Deputy Fire Marshal

LARRY BARR
State Fire Coordinator

DEPARTMENT OF INSURANCE
OFFICE OF THE FIRE MARSHAL
501 N. WEST STREET • 1001 WOOLFOLK BUILDING
JACKSON, MISSISSIPPI 39201
firemarshal@mid. state.ms.us
Website: www.doi.state.ms.us

Post Office Box 79 (39205)
Jackson, Mississippi
State Fire Marshal's Office
(601) 359-1061
1-888-648-0877
Fax: (601) 359-1076
State Fire Coordinator
(601) 359-1062

July 2, 2007

Mr. David J. Barts
Account Manager
NTA, Inc.
305 North Oakland Avenue/P. O. Box 490
Nappanese, Indiana 46550

**RE: Lexington Homes**
**Model# 1458**

Dear Mr. Barts:

Eugene Humphrey, Assistant State Chief Fire Marshal, has requested that I contact you concerning the above referenced project dated June 22, 2007.

The State Fire Marshal's Office evaluation of the plans using the *2003* edition of the *International Residential Code* are found to be **in** substantial compliance and are hereby **approved** as submitted.

If you should have any questions or concerns, please do not hesitate to contact our office.

Sincerely,

James Jackson I SH

James Jackson, Deputy State Fire Marshal, I

Cc: Ricky Davis, Chief, Deputy State Fire Marshal

JJ/sh

R:/SHARE/MACKEY06/PLANREVIEW06/DAVIDBARTS.NTA.LEXINGTONHOMES.MODEL1458.0707.DOC

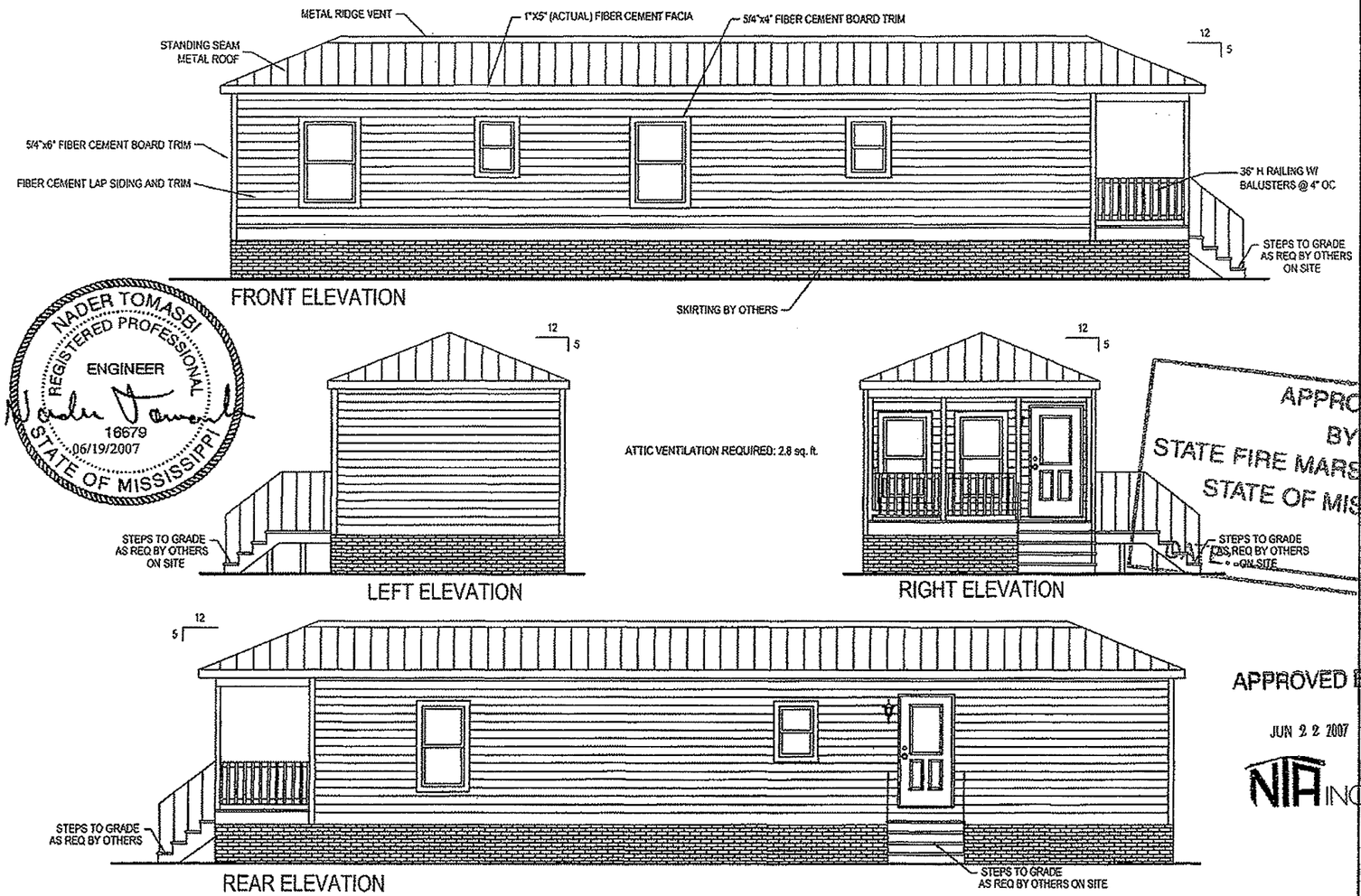


NADER TOMASBI
REGISTERED PROFESSIONAL
ENGINEER
16679
06/19/2007
STATE OF MISSISSIPPI

APPROVED
BY
STATE FIRE MARSHAL'S OFFICE
STATE OF MISSISSIPPI
DATE 6/29/07

APPROVED BY
JUN 22 2007
NIA INC.

Install 7/16" OSB rated sheathing 32/16 on all exterior walls. Fasten with 7/16x1 1/2"x15ga. staples 4" O.C. edge and 4" O.C. field under Hard-i-Panel. Install Hard-i-Panel per installation instructions.

Must install 15/32" OSB or plywood, 32/16 rated sheathing (unless thicker decking is required from metal roof manufacturer) under metal roof. Fasten sheathing to trusses with 7/16" x 1 1/2" x 15ga. staples or 0.131 x 2" nails 3" OC at edges and 3" OC field. Metal roof approval and installation must be provided by metal roof manufacturer for applied wind load (PE sealed) and is not part of this package.

| | | | | | |
|---|---|---|---|---|---|
| STMS041307-22 | Title: Hip Roof Elevations | dti • design • tech • inc • | Drawn By: . Date: . / Revised By: . Date: . | Model No. 1458 | Pg. 1.A |

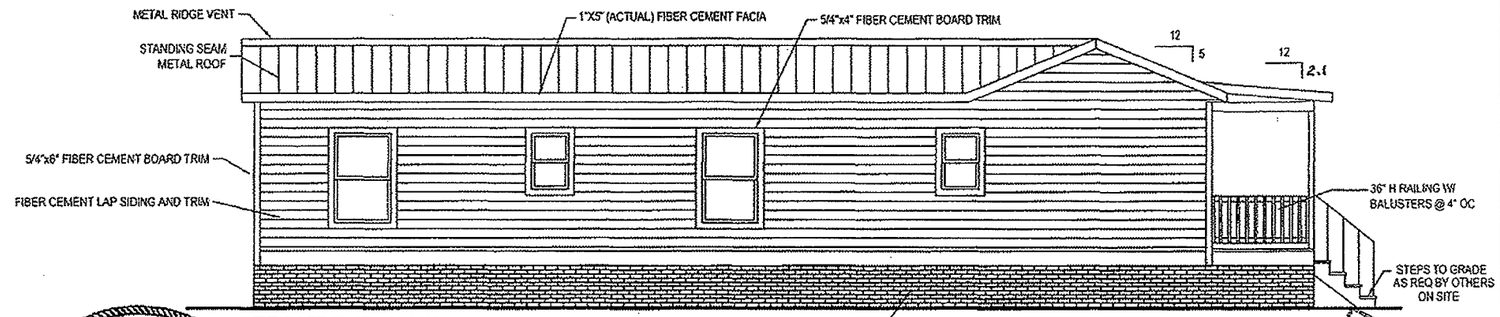


FRONT ELEVATION

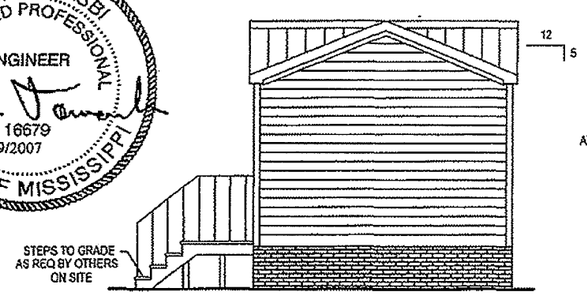


LEFT ELEVATION

ATTIC VENTILATION REQUIRED: 2.8 sq. ft.

RIGHT ELEVATION

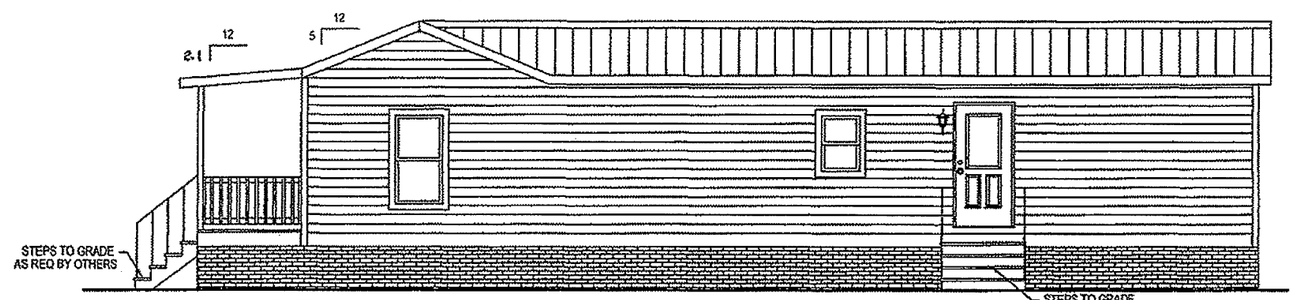


REAR ELEVATION

NADER TOMASBI
REGISTERED PROFESSIONAL
ENGINEER
16679
06/19/2007
STATE OF MISSISSIPPI

APPROVED BY
STATE FIRE MARSHAL'S OFFICE
STATE OF MISSISSIPPI
DATE:

APPROVED BY
JUN 22 2007
NTA INC

Install 7/16" OSB rated sheathing 32/16 on all exterior walls. Fasten with 7/16x1 1/2"x15ga. staples 4" O.C. edge and 4" O.C. field under Hard-i-Panel. Install Hard-i-Panel per installation instructions.

Must install 15/32" OSB or plywood, 32/16 rated sheathing (unless thicker decking is required from metal roof manufacturer) under metal roof. Fasten sheathing to trusses with 7/16" x 1 1/2" x 15ga. staples or 0.131 x 2" nails 3" OC at edges and 3" OC field. Metal roof approval and installation must be provided by metal roof manufacturer for applied wind load (PE sealed) and is not part of this package.

| | | | | | |
|---|---|---|---|---|---|
| STMS041307-22 | Title: Elevations | dti design+tech+inc | Drawn By: . Date: . / Revised By: . Date: . | Model No. 1458 | Pg. 1.B |

RECEIVED
JUN 22 2007
STATE MISS INSURANCE DEPT
FIRE MARSHAL'S OFFICE

## Design Codes: (Mississippi)

2003 IBC/IRC, 2005 NEC
MISSISSIPPI MODULAR APPROVAL
FLOOR LIVE LOAD: 40 PSF — TCDL = 7 PSF
FLOOR DEAD LOAD: 10 PSF — BCDL = 7 PSF
GROUND SNOW LOAD: 30 PSF. — BCLL = 10 PSF
WIND LOAD:
A. 150 MPH AT 3 SECOND GUST, EXPOSURE B
HUD = WIND ZONE 3
B. Iw = 1.0 _____WIND IMPORTANCE FACTOR
C. B _____WIND EXPOSURE CATEGORY.
D. GCpi = +/- 0.18 _____INTERNAL PRESSURE COEFFICIENT.
E1. Pw = 54.2 PSF _____(END ZONE) WALL COMPONENT & CLADDING LOAD.
E2. Pw = 43.9 PSF _____(INTERIOR ZONE) WALL COMPONENT & CLADDING LOAD.
F1. Pr = 37.0 PSF _____(INTERIOR ZONE) ROOF COMPONENT & CLADDING LOAD.
F2. Pr = 64.5 PSF _____(END ZONE) ROOF COMPONENT & CLADDING LOAD.
F3. Pr = 95.4 PSF _____(CORNER ZONE) ROOF COMPONENT & CLADDING LOAD.
G1. OVERHANG =75.5 PSF (SIDE ZONE)
G2. OVERHANG = 126.9 PSF (CORNER ZONE)
H. THIS BUILDING IS NOT DESIGNED FOR PLACEMENT ON THE UPPER HALF OF A HILL OR ESCARPMENT EXCEEDING 15 FEET IN HEIGHT.
WALL HEIGHT: 96 1/4" MAX. SEISMIC DESIGN CATEGORY : C

## Building Site Installation Requirements:

The following items have not been completed by the building manufacturer, have not been inspected by the third party inspection agency, and are not certified by the state modular label and/or certification. Code compliance for these items must be determined at the local level:

1). The completed foundation support system and tie down and/or anchorage system.
2). Electrical service hookup (including any feeders or service wires/cables, or the Service Panel if not installed in factory).
3). Building drains, cleanouts, and hookups to plumbing system, or a portion thereof, and any/and/or all finish plumbing.
4). Ramps, stairs, and general means of access to the building.
5). Install R-6.5 insulation on all piping installed in unconditioned spaces.
6). HVAC system crossover ducts and/or entire HVAC systems or a portion thereof. (including but not limited to: below floor ducting, external heat pumps, A/C units, etc.)
7). Crawl space or basement light and switch.

LEXINGTON HOMES
P.O. Box 641 Lexington, MS 39095

1458

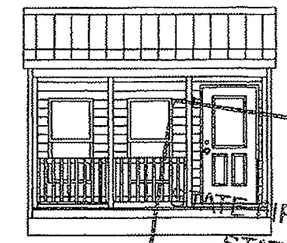

Elevation may depict options at additional cost.

APPROVED BY
FIRE MARSHAL'S OFFICE
STATE OF MISSISSIPPI
DATE 6/29/07

## Thermal Design Criteria (Insulation):

R-11 Floors; R-19 Walls; R-30 Min. Roof
(Doors - U=.60 min.; Windows - U=.36 or better)
HUD Thermal zone 1.

APPROVED BY
JUN 22 2007
NTA INC

| Drawing Description Index | Page #: | Drawing Description Index | Page #: |
|---|---|---|---|
| Typical Elevations | 1.A, 1.B | Porch Section and Details | 17.A, 17.B |
| Floor Plan | 2.A | Hip Porch Section | 17.C |
| Floor Plan - UFAS | 2.B | Metal Roof Details | 18.A,18.B |
| Cross Section Details | 3.A, 3.B | Porch Framing Details | 19 |
| Carrier Frame | 4 | Water Supply | 20 |
| Carrier Details | 5 | DWV System | 21 |
| Off-Frame Foundation Plans | 6.A, 6.B | Electrical Plan | 22.A |
| On-Frame Foundation Plans | 7.A, 7.B, 7.C | Electrical Load Calc | 22.B |
| Floor Framing | 8 | HVAC System | 23.A |
| Floor Decking | 9 | Manual J | 23.B |
| Left Sidewall | 10 | Manual D | 23.C |
| Right Sidewall | 11 | Energy Compliance (Rescheck) | 23.D |
| Sidewall Details | 12 | Connection Details | 24.A, 24.B |
| Shearwalls | 13.A, 13.B, 13.C | Cabinet Details | 25 |
| Ship Loose Window Protectors | 14 | Cabinet Details | 26 |
| Roof Framing | 15 | Trusses | 27 |
| Roof Framing Elev. B | 16 | Calculation | 28 |

P.E. Seal

NADER TOMASBI
REGISTERED PROFESSIONAL ENGINEER
16679
06/19/2007
STATE OF MISSISSIPPI

3rd Party Stamp

## Additional Notes:

Typical foundation details provided w/ this drawing set. The design criteria herein is for this system only as shown. For other design deviations or special site requirements, consult a licensed Professional Engineer locally. If the foundation plans are designed by others, the designer of the building plans shall not be held responsible or liable for the foundation design and the consequential performance of the superstructure's structural components and systems related thereto.
Areas within hurricane prone regions within one mile of the coastal mean high water line w/ wind speed of 110 or greater or a basic wind speed of 120 mph or greater must have window protection installed on-site by others. Window protection must meet the requirements of the code and the "Large Missile Test".
Manufacturer's installation instructions shall be available on the job site at the time of inspection.
Design criteria for basic wind speeds equal or exceeding 110 mph per ASCE 7-02 in accordance with Section R301.2.1.1.
STRUCTURE NOT TO BE LOCATED IN FLOOD PLANE AREAS UNLESS A LOCAL P.E. DESIGNS FOUNDATION FOR SUCH AREAS.

dti ♦design♦tech♦inc♦

Disclaimer: These drawings have been prepared and reviewed in accordance with all applicable codes. This drawing set is not intended to be all inclusive, nor does this set detail every code required aspect of this building. Compliance with all applicable codes per local authority having jurisdiction whether detailed in this set or not must be met. This document is developed based on information provided by State of Mississippi Emergency Management Agency (project # STMS012507).

A TOTAL SHEAR LENGTH=156"
HUD WIND ZONE 3 AND
150 MPH,EXP.'B'=280 PLF

B TOTAL SHEAR LENGTH=108"
HUD WIND ZONE 3 AND
150 MPH,EXP.'B'=642 PLF

C TOTAL SHEAR LENGTH=108"
HUD WIND ZONE 3 AND
150 MPH,EXP.'B'=591 PLF

D TOTAL SHEAR LENGTH=44"
HUD WIND ZONE 3 AND
150 MPH,EXP.'B'=582 PLF

0 1' 2' 5' 10'
SCALE BAR

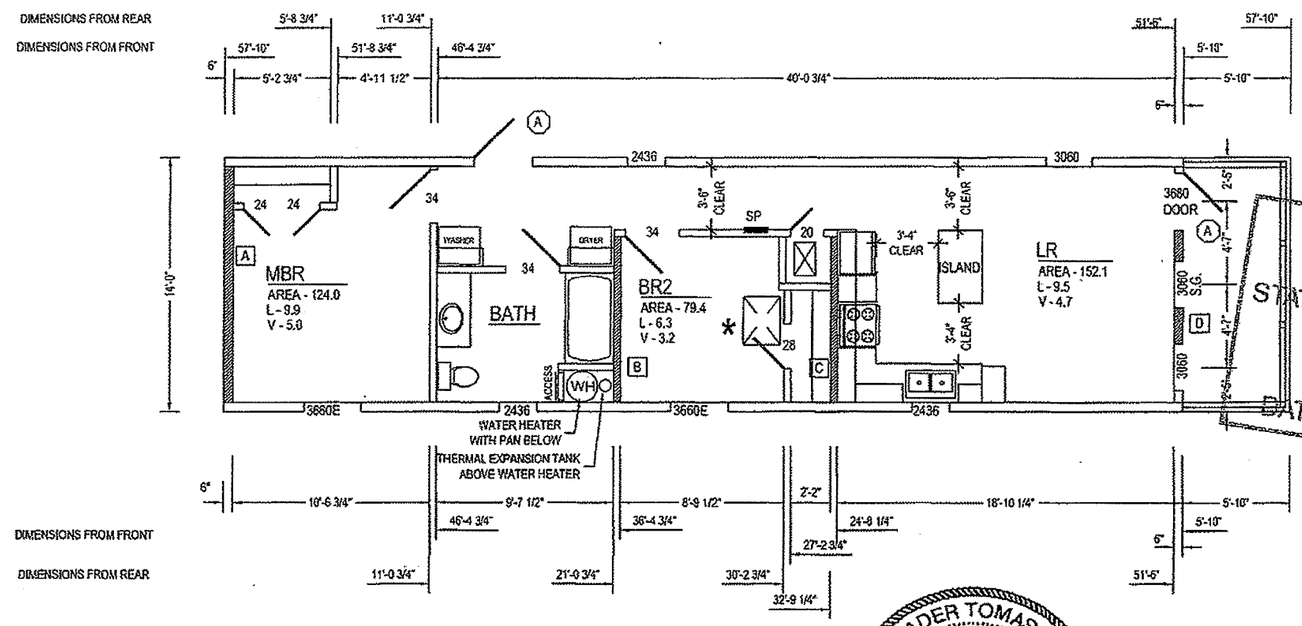


APPROVED
BY
STATE FIRE MARSHAL'S OFFICE
STATE OF MISSISSIPPI
DATE: 6/26/07

APPROVED BY
JUN 22 2007
NTA INC

NADER TOMASBI
REGISTERED PROFESSIONAL
ENGINEER
16679
06/19/2007
STATE OF MISSISSIPPI

NOTES:

ALL R.A.G. WILL BE IN CEILING

HVAC SYSTEMS MAY BE SUPPLIED, INSTALLED, AND INSPECTED ON SITE BY OTHERS, TYPICAL.

ALL WALLS 4 1/2" THICK UNLESS NOTED

22"X30" ATTIC ACCESS REQUIRED WHEN CLEAR HEIGHT OF ATTIC EXCEEDS 30".

* NOTE: NOT FOR STORAGE

S.G.: SAFETY GLASS
(A) -36" MIN. DOOR WIDTH
TOTAL WINDOW AREA - 68.90 SQ. FT.
'E' - INDICATES EGRESS WINDOW
DATA PLATE LOCATION - KITCHEN BASE COVER
STATE LABEL LOCATION - KITCHEN SINK BASE CABINET
THIRD PARTY LOCATION - KITCHEN SINK BASE CABINET

| STMS041307-22 | Title: Floor Plan | dti design-tech-inc | Drawn By: Date: / Revised By: Date: | Model No. 1458 | Pg. 2.A |
|---|---|---|---|---|---|

A TOTAL SHEAR LENGTH=156"
HUD WIND ZONE 3 AND
150 MPH,EXP.'B'=280 PLF

B TOTAL SHEAR LENGTH=108"
HUD WIND ZONE 3 AND
150 MPH,EXP.'B'=642 PLF

C TOTAL SHEAR LENGTH=108"
HUD WIND ZONE 3 AND
150 MPH,EXP.'B'=591 PLF

D TOTAL SHEAR LENGTH=44"
HUD WIND ZONE 3 AND
150 MPH,EXP.'B'=582 PLF

0 1' 2' 5' 10'
SCALE BAR

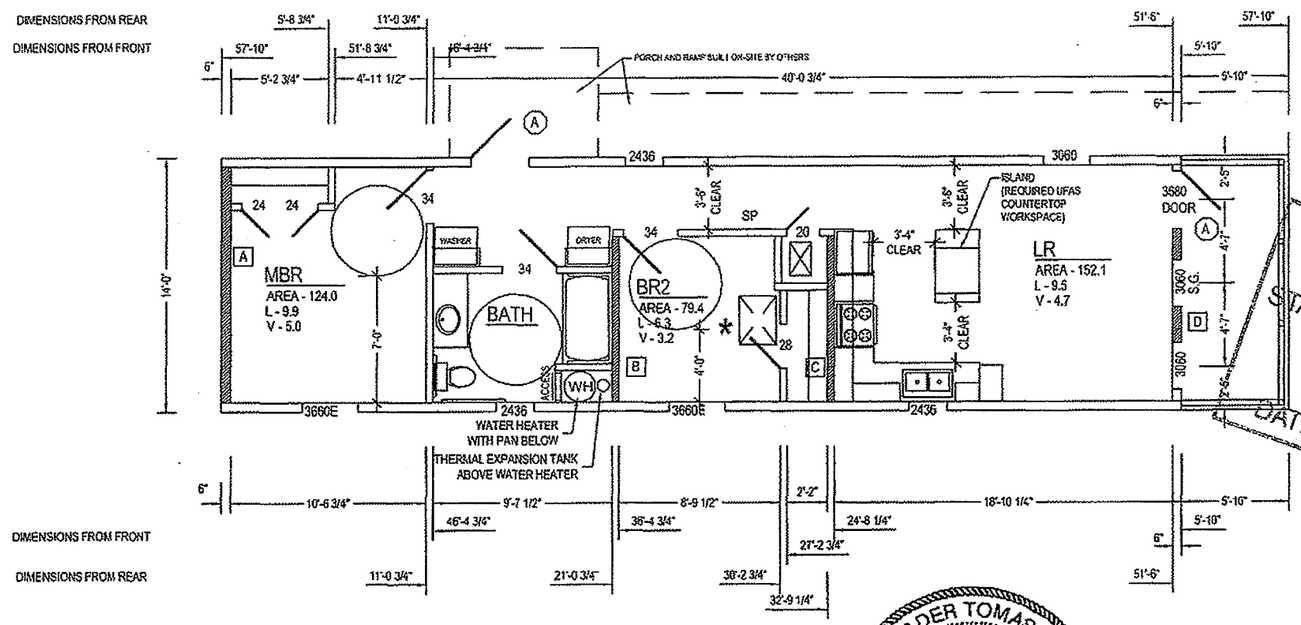


APPROVED BY
STATE FIRE MARSHAL'S OFFICE
STATE OF MISSISSIPPI
DATE: 6/21/07

APPROVED BY
JUN 22 2007

NADER TOMASBI
REGISTERED PROFESSIONAL
ENGINEER
16679
06/19/2007
STATE OF MISSISSIPPI

NTA INC.

NOTES:

ALL R.A.G. WILL BE IN CEILING

HVAC SYSTEMS MAY BE SUPPLIED, INSTALLED, AND INSPECTED ON SITE BY OTHERS, TYPICAL.

ALL WALLS 4 1/2" THICK UNLESS NOTED

22"X30" ATTIC ACCESS REQUIRED WHEN CLEAR HEIGHT OF ATTIC EXCEEDS 30".
* NOTE: NOT FOR STORAGE

S.G.: SAFETY GLASS
(A) -36" MIN. DOOR WIDTH
TOTAL WINDOW AREA - 68.90 SQ. FT.
'E' - INDICATES EGRESS WINDOW
DATA PLATE LOCATION - KITCHEN BASE COVER
STATE LABEL LOCATION - KITCHEN SINK BASE CABINET
THIRD PARTY LOCATION - KITCHEN SINK BASE CABINET

| STMS041307-22 | Title: Floor Plan - UFAS | dti design-tech-inc | Drawn By: . Date: . / Revised By: . Date: . | Model No. 1458 | Pg. 2.B |
|---|---|---|---|---|---|

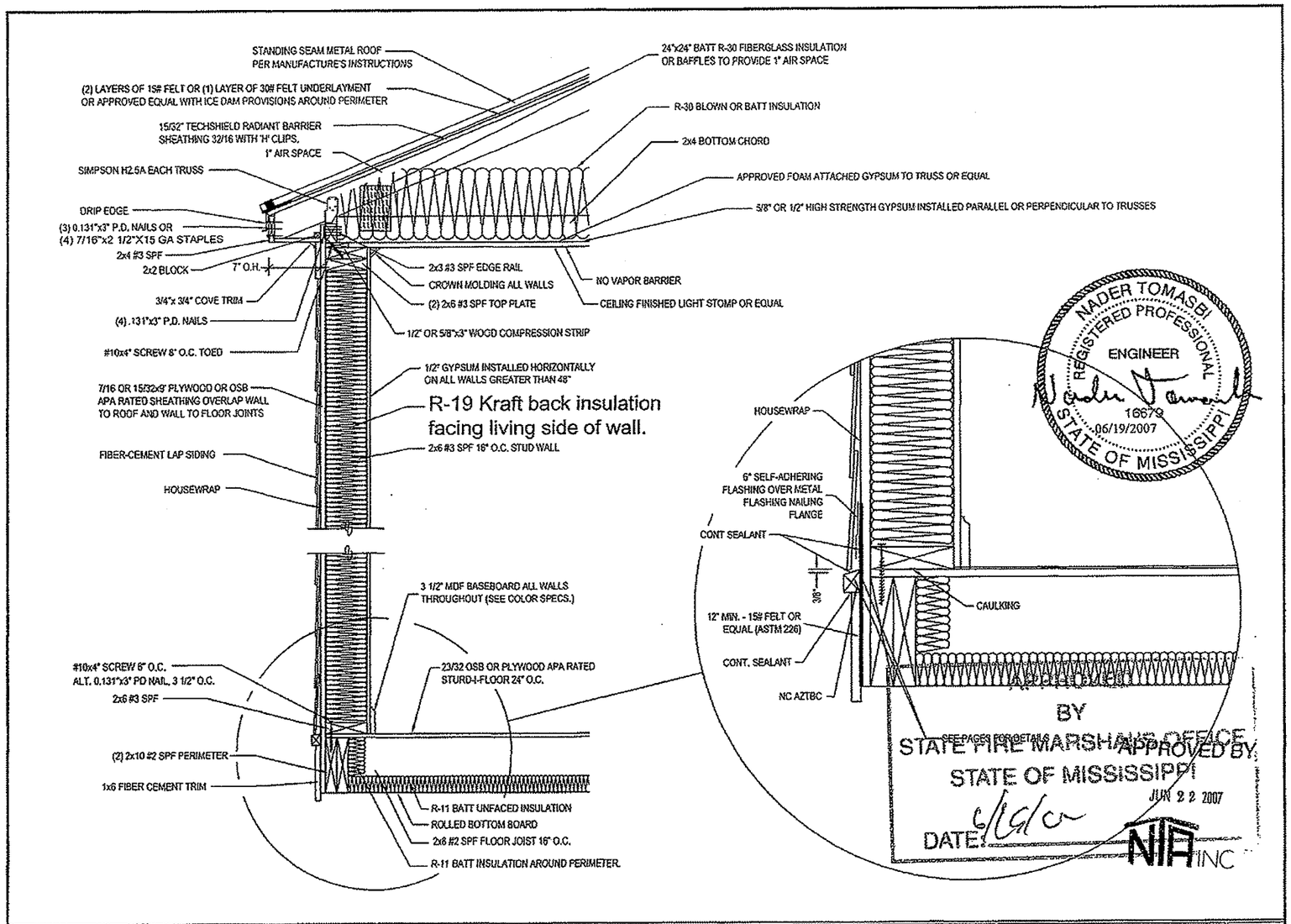


| | | | | | |
|---|---|---|---|---|---|
| STMS041307-22 | Title: Sidewall Cross Section | dti ◆design◆tech◆inc◆ | Drawn By: . Date: . / Revised By: . Date: . | Model No. 1458 | Pg. 3.A |

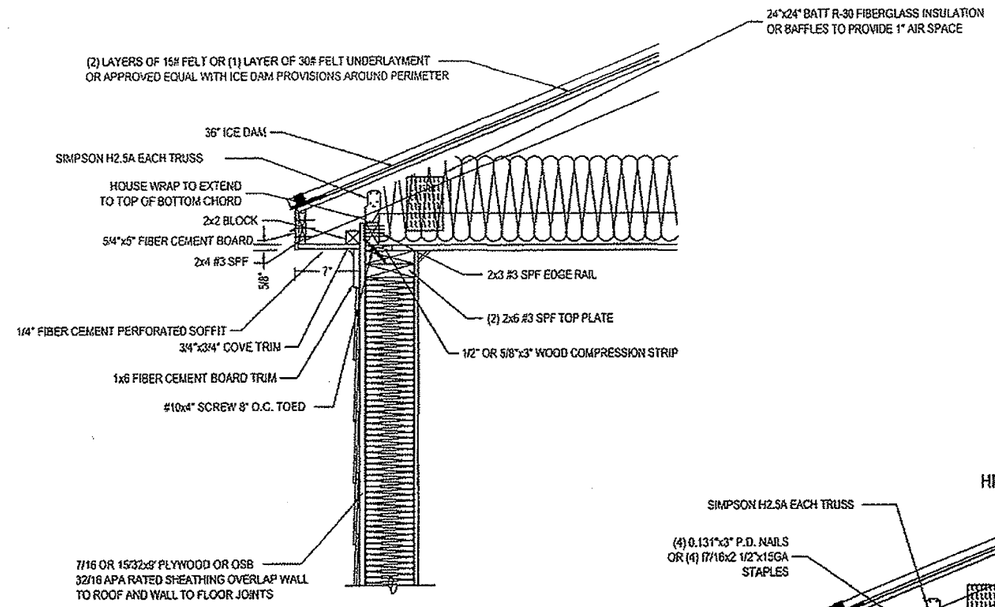


STANDARD SIDEWALL OVERHANG

NOT TO SCALE

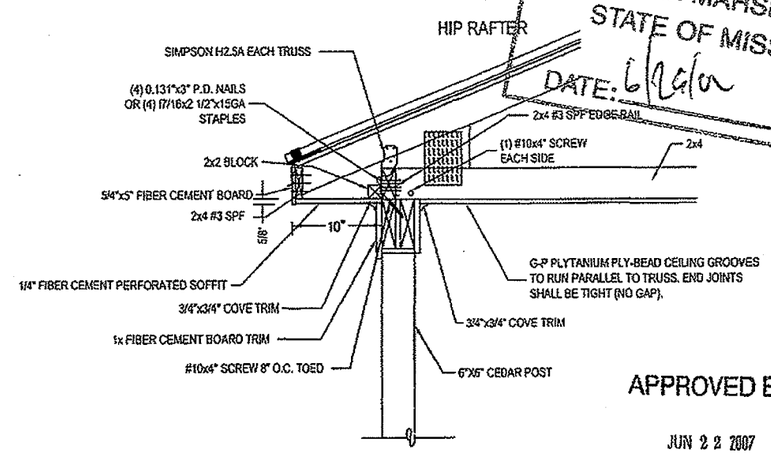


PORCH SIDEWALL OVERHANG

NOT TO SCALE

APPROVED
BY
STATE FIRE MARSHAL'S OFFICE
STATE OF MISSISSIPPI
DATE: 6/26/07

NADER TOMASBI
REGISTERED PROFESSIONAL
ENGINEER
16679
06/19/2007
STATE OF MISSISSIPPI

APPROVED BY

JUN 22 2007

NTA INC

| | | | | | |
|---|---|---|---|---|---|
| STMS041307-22 | Title: Alternate Cross Section | dti design•tech•inc | Drawn By: . Date: . Revised By: . Date: . | Model No. 1458 | Pg. 3.B |

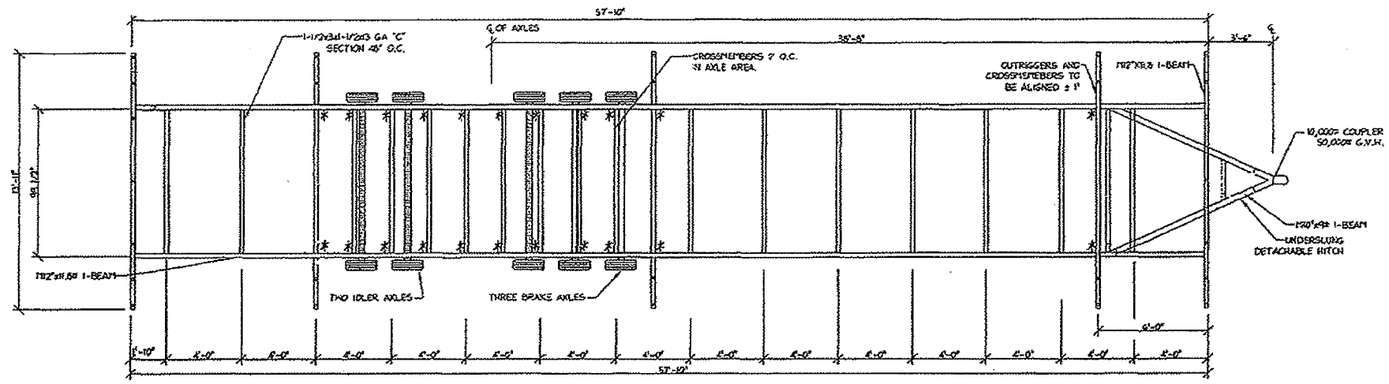


FRAME NOTES:

1. 7 HOLES IN FRONT AND REAR X-MEMBERS FOR 9"Wx3" F.T. LAGS.
   - 2 WITHIN 12" OF EACH END.
   - 2 WITHIN 6" OF EACH I-BEAM.
   - 1 LOCATED AT MID-POINT.
2. FRAME COMPLETELY COATED WITH WATER PROOF PAINT AFTER ALL WELDING IS COMPLETE.
3. WELD ALL METAL TO METAL CONTACT WITH 1/8" FILLET OR AS OTHERWISE NOTED.
4. FLOOR LAGGED TO FRAME WITH FRAME CLIP, 9"Wx3" F.T. LAGS EACH JOIST.
5. CLIPS TO BE WELDED TO I BEAM.
6. TIRE, AXLES, BRAKES AND BRAKE WIRING TO MEET ALL FEDERAL STANDARDS.
7. TIRES SHALL BE 8X14.5 10 PLY "E"
8. FIVE NEW AXLES (TRIPLE EQUALIZED PLUS TANDEM EQUALIZED SPREAD); (3) WITH BRAKES
9. RIMS, BOLTS, NUTS, OR OTHER RELATED TIRE-MOUNTING HARDWARE MUST BE NEW.
10. UNDERSLUNG DETACHABLE HITCH REMOVED AND STORED UNDER PORCH AFTER SET UP.
11. SERIAL NUMBER MUST BE STAMPED ON THE FRONT CROSSMEMBER IN 3/8" HIGH LETTERS.
12. CAMBER TO BE ADDED TO MAIN I-BEAM PER INDUSTRY STANDARDS.
13. 9"Wx3" LAGS TO HAVE A MINIMUM BENDING YIELD STRESS, F=190,000 PSI.

* ANGLE BRACKET LOCATION

APPROVED BY

JUN 22 2007

NTA INC

APPROVED
BY
STATE FIRE MARSHAL'S OFFICE
STATE OF MISSISSIPPI
DATE: 6/29/07

NADER TOMASBI
REGISTERED PROFESSIONAL
ENGINEER
16679
06/19/2007
STATE OF MISSISSIPPI

| | | | | | |
|---|---|---|---|---|---|
| STMS041307-22 | Title: CARRIER FRAME | dti ◆design◆tech◆inc◆ | Drawn By: . Date: . / Revised By: . Date: . | Model No. 1458 | Pg. 4 |

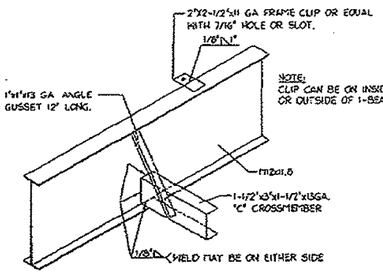


CROSSMEMBER TO I-BEAM
SCALE: NONE

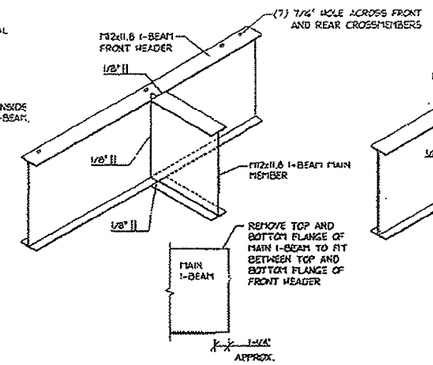


I-BEAM TO I-BEAM
SCALE: NONE

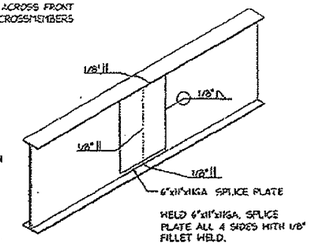


SPLICE PLATE
SCALE: NONE

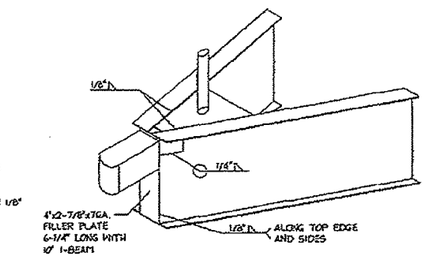


FILLER PLATE
SCALE: NONE

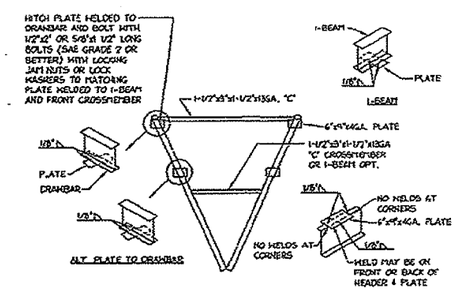


WELD DETAIL
SCALE: 3/16"=1'-0"

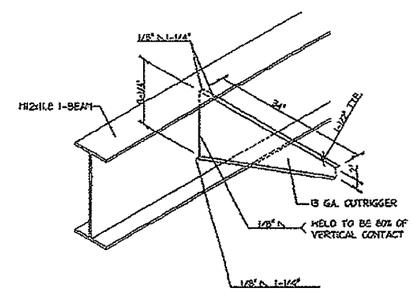


OUTRIGGER TO I-BEAM
NONE

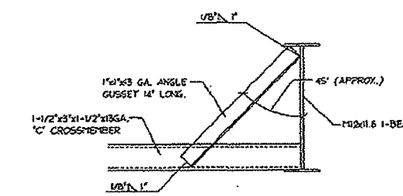


X-MEMBER GUSSET DETAIL
SCALE: NONE

NOTE:
1. WELDING TO BE DONE IN ACCORDANCE WITH AWS REQUIREMENTS.
2. WELD RODS TO BE E6010 OR E7010 OR EQUAL APPLIED PER MANUFACTURES INSTRUCTIONS.
3. ALL WELD TO BE CHIPPED.
4. FRAME TO BE COMPLETELY PAINTED AFTER WELDING IS COMPLETED.

APPROVED BY
JUN 22 2007
NTA INC

NADER TOMASBI
REGISTERED PROFESSIONAL ENGINEER
STATE OF MISSISSIPPI
16679
06/19/2007
DATE

APPROVED BY
FIRE MARSHAL'S OFFICE
STATE OF MISSISSIPPI

| | | | | | |
|---|---|---|---|---|---|
| STMS041307-22 | Title: CARRIER DETAILS | dti • design • tech • inc • | Drawn By: . Date: . / Revised By: . Date: . | Model No. 1458 | Pg. 5 |

MAX. GROUND SNOW LOAD : 30 PSF
MAX. WIND SPEED: 150 MPH
HUD WIND ZONE 3
WIND EXPOUSURE: B
MAX MEAN ROOF HEIGHT: 30'
SEISMIC DESIGN CATEGORY: C

# FOUNDATION BASE ON 2000 PSF SOIL & 1200 PSF SOIL

NOTES:
FOUNDATION TO BE DESIGNED TO MEET THE NOTED LOADS. FOUNDATION DESIGN AND TIE DOWNS MUST BE APPROVED BY LOCAL LICENSE ENGIEER/ARCHITECT

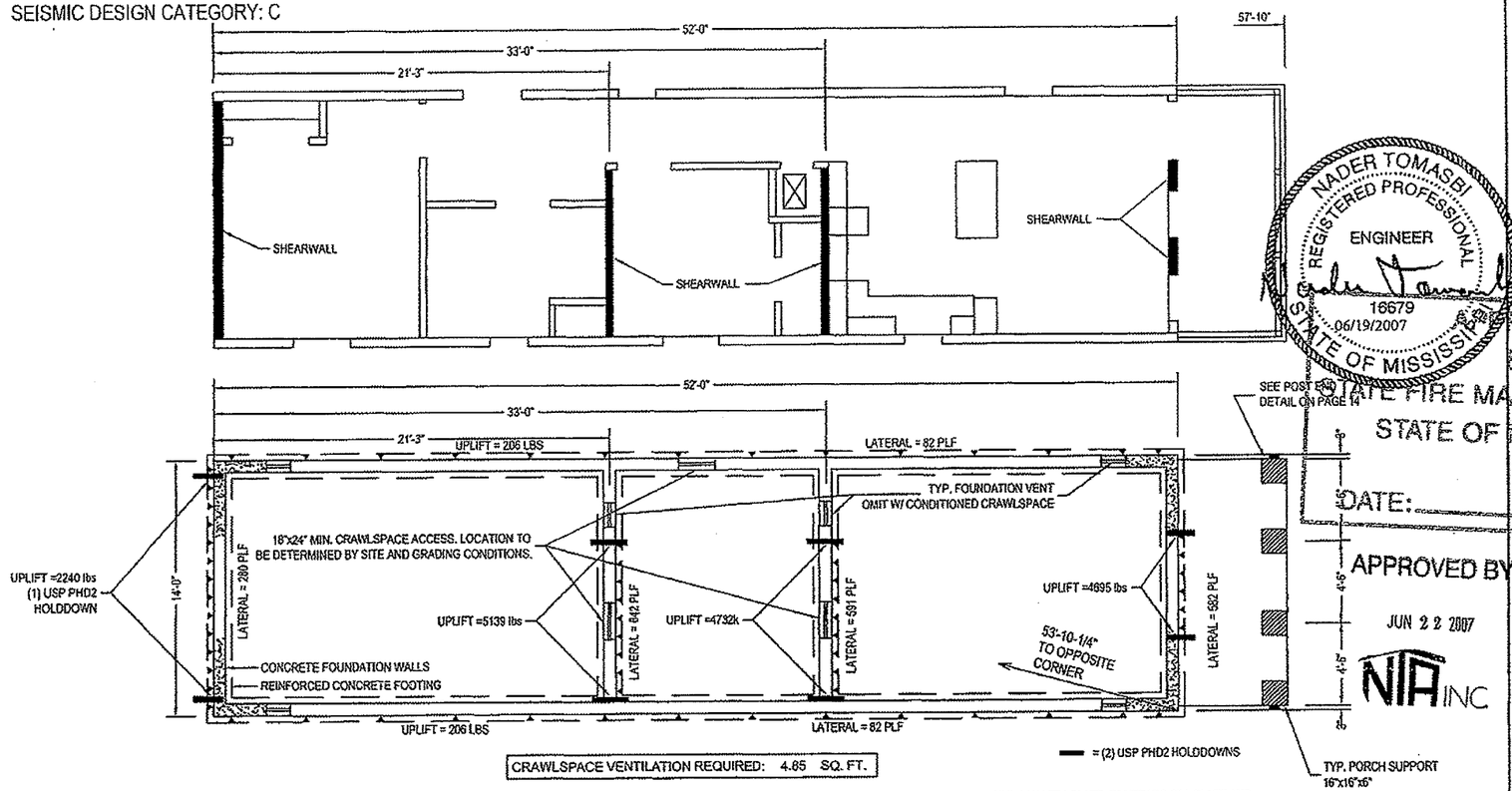


CRAWLSPACE VENTILATION REQUIRED: 4.65 SQ. FT.

▼ = SIMPSON LTP4 PLATE, FASTEN TO SILL PLATE AND RIM JOIST W/(6) 8Dx1-1/2" NAILS (6) PER EACH MEMBER

NADER TOMASBI REGISTERED PROFESSIONAL ENGINEER 16679 06/19/2007 STATE OF MISSISSIPPI

APPROVED BY STATE FIRE MARSHAL'S OFFICE STATE OF MISSISSIPPI
DATE: 6/29/07

APPROVED BY
JUN 22 2007
NTA INC

## 'OFF-FRAME' FOUNDATION NOTES:

1) FOUNDATION LAYOUT IS APPLICABLE TO NOTED MAXIMUM SNOW LOADING AND MINIMUM SOIL BEARING PRESSURE. REFER TO INSTALLATION INSTRUCTION MANUAL FOR OTHER APPLICABLE INFORMATION. CONSULT LOCAL OFFICIALS AND THE APPLICABLE LOCAL CODES FOR OTHER REQUIREMENTS (I.E. DRAINAGE, DAMP-PROOFING, BACKFILL SUPPORT, ETC.).
2) FOR DEVIATIONS AND/OR OTHER FOUNDATION DESIGNS CONSULT A LOCAL PROFESSIONAL ENGINEER AND YOUR LOCAL BUILDING OFFICIAL.
3) SILL PLATE FASTENING TO BE PER INSTALLATION INSTRUCTION AND/OR LOCAL CODES. SILL FASTENING REQUIREMENT IS PER APPLICABLE WIND SPEED AND SEISMIC ZONES. SEE YOUR HOME DATA PLATE FOR APPLICABLE ZONES.
4) CONCRETE COMPRESSIVE STRENGTH (FC'): 3000 PSI.

NOTE: SEE PAGE 6B FOR ADDITIONAL FOUNDATION INFORMATION

| | | | | | |
|---|---|---|---|---|---|
| STMS041307-22 | Title: Crawlspace Foundation (30psf) | dti design•tech•inc | Drawn By: . Date: . / Revised By: . Date: . | Model No. 1458 | Pg. 6.A |

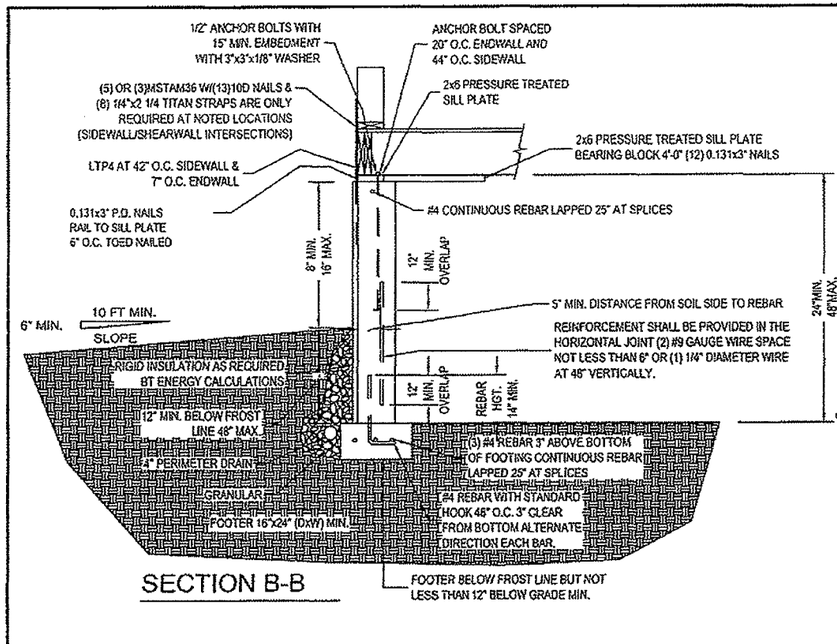


## SECTION B-B

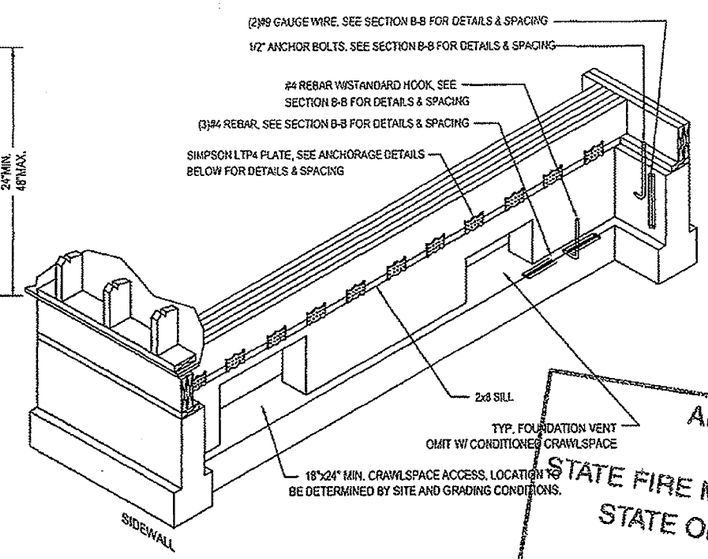


## INTERIOR FOUNDATION SHEARWALL DETAIL

NOT TO SCALE

APPROVED BY
STATE FIRE MARSHAL'S OFFICE
STATE OF MISSISSIPPI
6/22/07

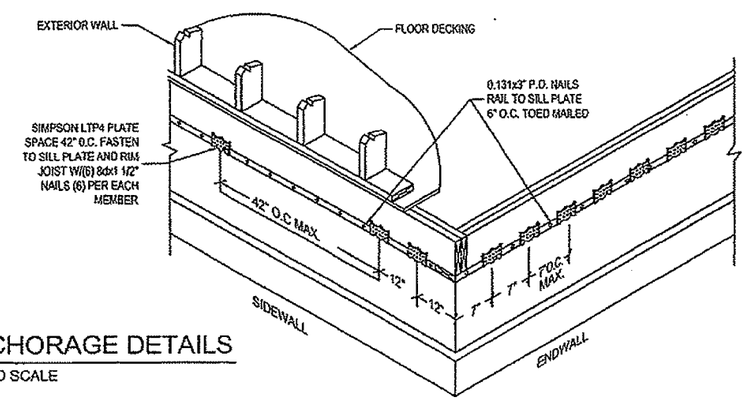


## ANCHORAGE DETAILS

NOT TO SCALE

NADER TOMASBI
REGISTERED PROFESSIONAL ENGINEER
16679
06/19/2007
STATE OF MISSISSIPPI

APPROVED BY
JUN 22 2007
NTA INC

WIND SPEED 150 MPH & HUD WIND ZONE 3
SEISMIC DESIGN CATEGORY C
SOIL CLASS: GW, GP, SW, AND SP.
LATERAL SOIL LOAD: 30 PSF/FT
MAX. HEIGHT: 4'-0"
MAX. UNBALANCED FILL: 3'-4"

| | | | | | |
|---|---|---|---|---|---|
| STMS041307-22 | Title: Crawlspace Foundation (30psf) | dti • design • tech • inc | Drawn By: . Date: . / Revised By: . Date: . | Model No. 1458 | Pg. 6.B |

MAX. GROUND SNOW LOAD : 30 PSF
MAX. WIND SPEED: 150 MPH
WIND EXPOUSURE: B
HUD = WIND ZONE 3
MAX MEAN ROOF HEIGHT: 30'
SEISMIC DESIGN CATEGORY: C

| FOOTING SIZE W/ CMU PIERS | SIZE MAX. LOAD (LBS.) | FOUNDATION BASE ON |
|---|---|---|
| 24"x24"x8" | 7.6K | 2000 PSF SOIL |

| FOOTING SIZE W/ CMU PIERS | SIZE MAX. LOAD (LBS.) | FOUNDATION BASE ON |
|---|---|---|
| 36"x36"x10" | 7.9K | 1200 PSF SOIL |

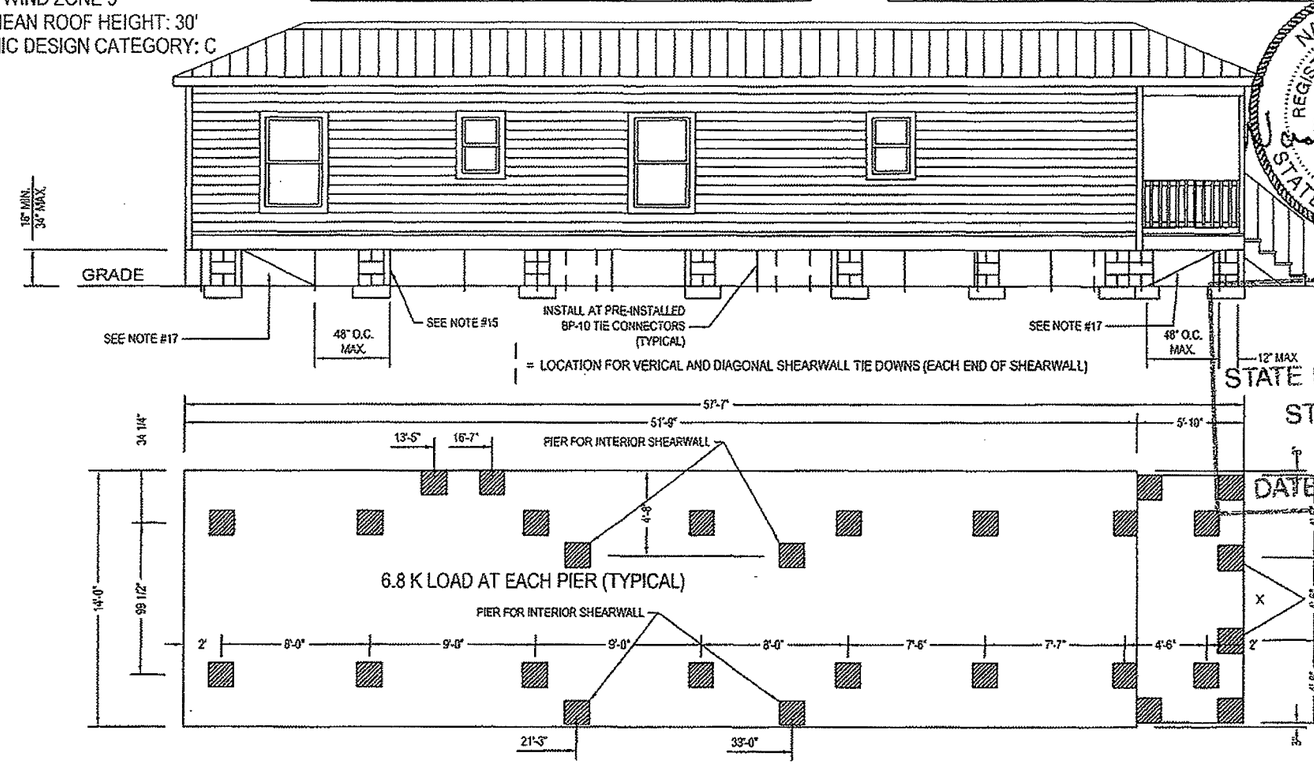


NADER TOMASEK
REGISTERED PROFESSIONAL ENGINEER
16679
06/19/2007
STATE OF MISSISSIPPI

APPROVED
BY
STATE FIRE MARSHAL'S OFFICE
STATE OF MISSISSIPPI
DATE: 6/29/07

APPROVED BY
JUN 22 2007
NIA INC

`ON-FRAME STANDARD I-BEAM' FOUNDATION NOTES:

1) FOUNDATION LAYOUT IS APPLICABLE TO NOTED MAX. SNOW LOADING, WIND LOAD, SEISMIC CATEGORY & MIN. SOIL BEARING PRESSURE. REFER TO THE INSTALLATION INSTRUCTION MANUAL FOR OTHER APPLICABLE INFORMATION. CONSULT LOCAL OFFICIALS AND
2) THE APPLICABLE LOCAL CODES FOR OTHER REQUIREMENTS (I.E. DRAINAGE, DAMP-PROOFING, BACKFILL SUPPORT, ETC.). FOR DEVIATIONS &/OR OTHER FOUNDATION DESIGNS CONSULT A LOCAL PROFESSIONAL ENGINEER & YOUR LOCAL BUILDING OFFICIAL.
3) CONCRETE COMPRESSIVE STRENGTH (FC'): 3000 PSI MINIMUM.
4) ALL FOOTINGS MUST BE 12" MIN. INTO NATURAL SOIL & MUST BE BELOW FROST LINE.
5) SHEARWALL AND PERIMETER PIER LOCATIONS MUST BE MARKED TO LOCATE PIERS ON SITE.

"ABS pads may be used if the rated capacity is in excess of noted pier loads, properly approved for the site conditions and is acceptable to the Local Authority Having Jurisdiction"

| STMS041307-22 | Title: TEMP. FOUNDATION REQ | dti design+tech-inc | Drawn By: . Date: . Revised By: . Date: . | Model No. 1458 | Pg. 7.A |
|---|---|---|---|---|---|

NOTES:
1. ALL ORGANIC AND DECAYABLE MATERIAL, SUCH AS GRASS, ROOTS, SCRAP WOOD MUST BE REMOVED BELOW THE HOME.
2. THE SITE SHALL BE PROPERLY GRADED TO PERMIT WATER TO DRAIN UNDER AND AWAY FROM THE HOME.
3. 6-MIL POLYETHYLENE SHEETING VAPOR BARRIER MUST BE INSTALLED COVERING THE ENTIRE AREA BENEATH THE HOME. THE SHEETING SHALL OVERLAP AT LEAST 6" AT ALL JOINTS.
4. THE FOOTING MUST BE PRE-CAST OR POUR-IN-PLACE CONCRETE AT LEAST 6" THICK OR DESIGNED BY A REGISTERED ENGINEER FOR THE LOCAL SOIL CONDITIONS.
5. PIERS TO BE DOUBLE 8"x16" BLOCK. MORTAR OR EXTERIOR STRUCTURAL COATING WHEN REQUIRED BY LOCAL OFFICIALS / CODES.
6. THE PIER SHALL BE CAPPED WITH 2" MAXIMUM HIGH CONCRETE OR WOOD CAP BLOCKS AND 4"x8" HARDWOOD SHIMS TO LEVEL THE HOME. THE SHIMS SHALL COVER THE ENTIRE WIDTH OF THE CAP BLOCKS AND USED IN PAIRS AND DRIVEN TIGHTLY SO THEY DO NOT OCCUPY MORE THAN ONE INCH OF VERTICAL SPACE.
7. THE PIER SHALL BE SPACED A MAXIMUM OF 2 FEET FROM EACH END OF HOME AND A MAXIMUM OF 10 FEET ON CENTER.
8. ADDITIONAL PIERS SHALL BE LOCATED UNDER THE POSTS.
9. THE ANCHOR STRAP SHALL BE A MINIMUM TYPE 1, FINISH B, GRADE ONE STEEL STRAPPING, 1 1/4" WIDE AND 0.035 INCHES THICK CERTIFIED BY A REGISTER ENGINEER CONFORMING WITH ASTM STANDARD D3953.91.
10. THE GROUND ANCHORS MUST HAVE A MINIMUM DESIGN CAPACITY FOR THE SOILS INTENDED OF 3150# CERTIFIED BY A REGISTERED ENGINEER.
11. THE GROUND ANCHORS MUST BE INSTALLED PER THE MANUFACTURERS INSTALLATION REQUIREMENTS.
12. THE TIE-DOWN STRAPS MUST BE PRETENSIONED PER THE MANUFACTURERS INSTALLATION INSTRUCTIONS.
13. ALL GROUND ANCHORS MUST BE LOCATED 12" ABOVE THE WATER TABLE.
14. ALL GROUND ANCHORS MUST BE INSTALLED BELOW THE FROST LINE.
15. VERTICAL AND DIAGONAL TIES 12" FROM PORCH END AND 4'-0" O.C. AND IN LINE WITH DIAGONAL TIES.
16. ADDITIONAL VERTICAL TIES SHALL BE LOCATED AT INTERIOR SHEARWALL LOCATIONS.
17. LONGITUDINAL TIES AT EACH I-BEAM EACH END.

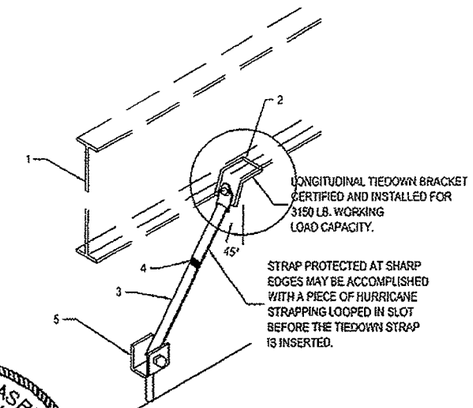


NADER TOMASBI
REGISTERED PROFESSIONAL ENGINEER
16679
06/19/2007
STATE OF MISSISSIPPI

LONGITUDINAL TIEDOWN ATTACHMENT DETAIL

1. TYPICAL LONGITUDINAL I-BEAM
2. FACTORY INSTALLED TIEDOWN BRACKET
3. LONGITUDINAL TIEDOWN STRAP
4. BANDING SEAL
5. GROUND ANCHOR-INSTALLED TO FULL DEPTH

APPROVED BY
STATE FIRE MARSHAL'S OFFICE
STATE OF MISSISSIPPI
DATE: 6/20/07

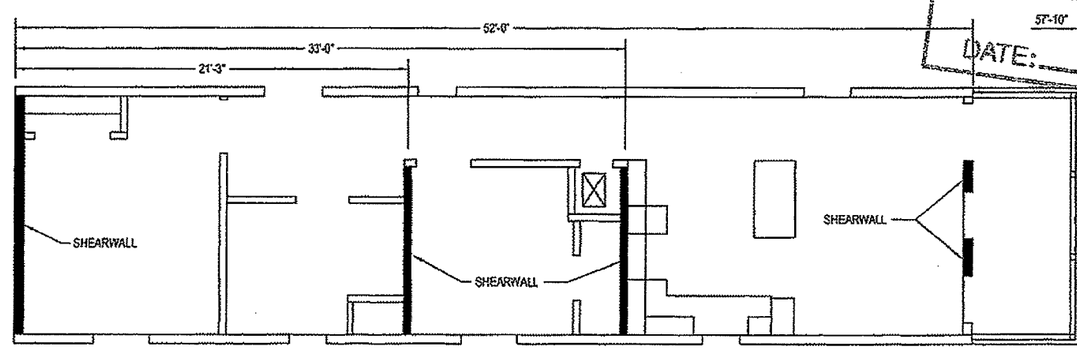


APPROVED BY
JUN 22 2007
NIA INC

| | | | | | |
|---|---|---|---|---|---|
| STMS041307-22 | Title: TEMP. FOUNDATION REQ | dti design•tech•inc | Drawn By: Date: / Revised By: Date: | Model No. 1458 | Pg. 7.B |

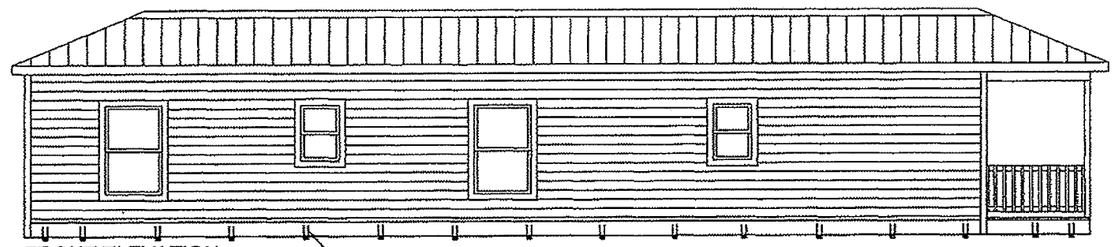

FRONT ELEVATION

48" TYP.

* INSTALL BP-10 TIE CONNECTOR BY BUILDING TECHNOLOGIES (FASTEN TO BOTTOM PLATE W/(2) #8x3" SCREWS) OR 16 GA. RIM JOIST BRACKET BY MASTERCRAFT FASTEN TO RIM W/(5)0.131x1 1/2" NAILS OR (5)#6x1 1/2" SCREWS) OR EQUIVALENT 48" O.C.

NADER TOMASBI
REGISTERED PROFESSIONAL
ENGINEER
16679
06/19/2007
STATE OF MISSISSIPPI

* ALTERNATE ANGLE BRACKET MAY BE USED IN PLACE OF BP-10.
LAG HOLES = 7/16" DIA. TYP. TOLERANCE DIMENSIONS+/- 1/8"
SLOT = 1 1/2" X 3/8" (CENTERED), GAUGE" 11
MAX. BRACKET CAPACITY 1746 LBS.
BRACKET FASTENED TO PERIMETER JOIST WITH (2) 5/16" X 3" LAG SCREWS. PERIMETER JOIST DOES NOT HAVE TO BE PRE-DRILLED.

NOTE:
1. MAY USE ANY OTHER EQUIVALENT METHODS FOR VERTICAL STRAPS.
2. CONNECTORS SHOWN ARE ONLY FOR TEMPORARY INSTALLS AND MUST BE REMOVED FOR PERMANENT SET UP.

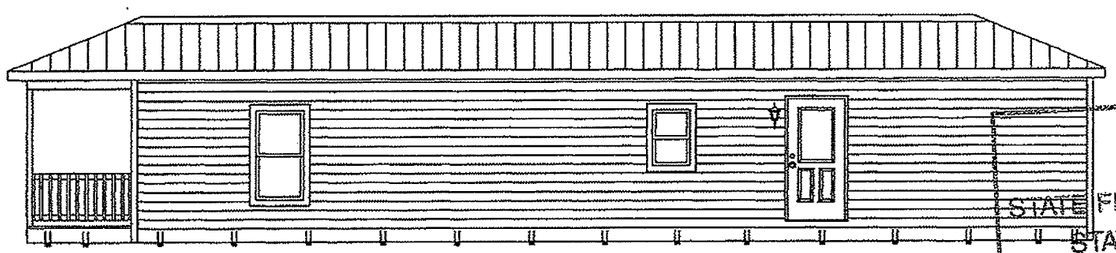

REAR ELEVATION

48" TYP.

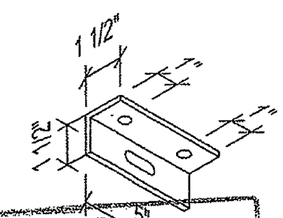


APPROVED
BY
STATE FIRE MARSHAL'S OFFICE
STATE OF MISSISSIPPI
APPROVED BY
DATE: 6/29/07
JUN 22 2007

NTA INC

TEMPORARY

| | | | | | |
|---|---|---|---|---|---|
| STMS041307-22 | Title: Temporary Foundation Tie down Strapping | dti ◆design◆tech◆inc◆ | Drawn By: . Date: . / Revised By: . Date: . | Model No. 1458 | Pg. 7.C |

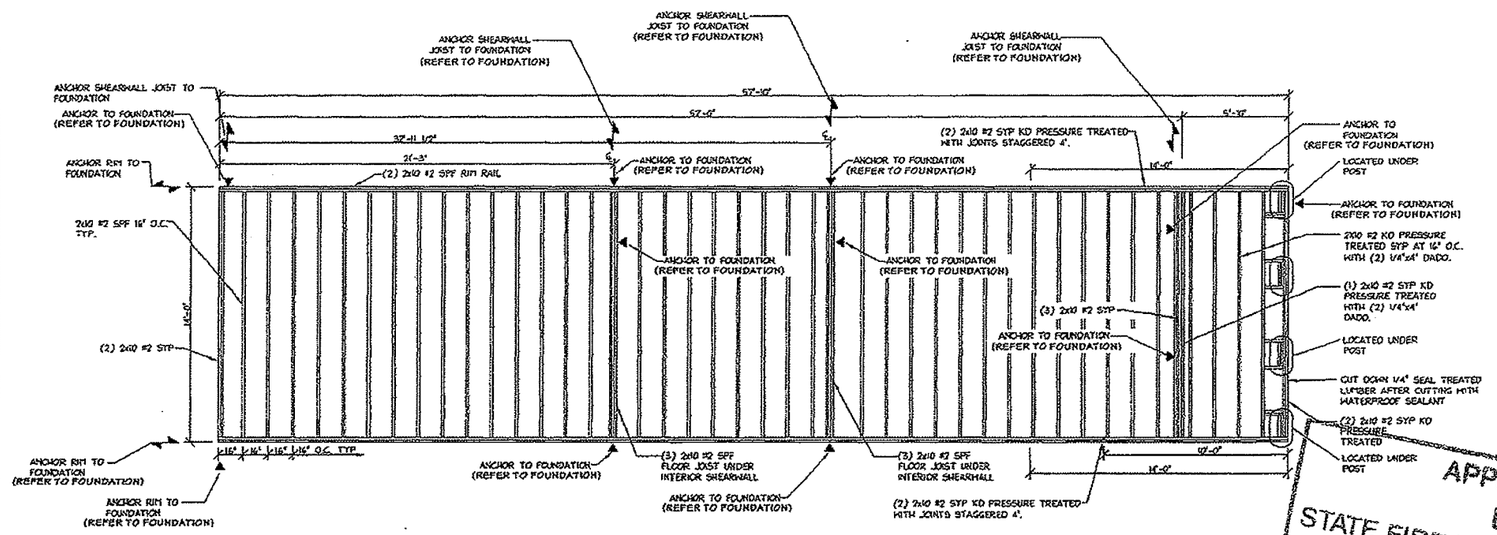


## FLOOR FRAMING

FRAMING NOTES:

1. PERIMETER RAIL TO TRANSVERSE JOIST (8) .131x3" P.D. NAILS.
2. PERIMETER SPLICE 4x4x20 GA CONNECTOR EACH SIDE OR EQUAL.
3. DOUBLE JOIST .131x3" P.D. NAILS 2 ROWS 12" O.C. STAGGERED.
4. 23/32 OSB OR PLYWOOD APA RATED STURD-I-FLOOR 24" O.C. DECKING TO JOIST 7/16d-3/4x16 GA STAPLE OR .099x2" P.D. NAILS 4" O.C. EDGE 8" O.C. FIELD WITH 100% ADHESIVE.
5. ADHESIVE REQUIRED ON TAG AND PERIMETER RAILS.
6. COMPOSITE DECK BOARD TO JOIST (2) #8x2" SCREWS PER JOIST (COMPOSITE DECK BOARD TO BE INSTALLED PER MANUFACTURERS INSTRUCTIONS).
7. BOTTOM BOARD (MFG., SHEPHARD MOBILE FLEX OR EQUAL.) FASTENED WITH 1"x3/4"x16 GA STAPLES 4" O.C.
8. ALL FASTENERS AND CONNECTOR PLATES INTO TREATED LUMBER MUST BE STAINLESS STEEL OR GALVANIZED STEEL APPROVED FOR TREATED LUMBER.
9. BOTTOM BOARD AND INSULATION NOT INSTALLED IN PORCH AREA.
10. MULTIPLE JOIST FASTENED TOGETHER WITH (2) ROWS OF .131x3" P.D. NAILS. OR 7/16"x2 1/2"x16GA. STAPLES 6" O.C. WITH 100% ADHESIVE.
11. NOTCHES IN JOIST TO BE PER IRC R502.6 OR HUD 9220.2(5)g

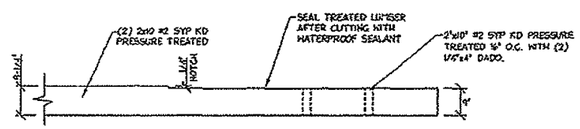


## EDGE RAIL NOTCH AT PORCH (OPTIONAL)

NTS

APPROVED BY

JUN 22 2007

NTA INC

NADER TOMASBI
REGISTERED PROFESSIONAL ENGINEER
16679
06/19/2007
STATE OF MISSISSIPPI

APPROVED BY STATE FIRE MARSHAL'S OFFICE STATE OF MISSISSIPPI 6/19/07

HARRISON COUNTY, PROVIDE THAT WOOD JOISTS OR THE BOTTOM OF A WOOD STRUCTURAL FLOOR WHEN CLOSER THAN 18" OR WOOD GIRDERS WHEN CLOSER THAN 12" TO THE EXPOSED GROUND IN CRAWLSPACES OR UNEXCAVATED AREA LOCATED WITHIN THE PEROPHERY OF THE BUILDING FOUNDATION SHALL BE TREATED.

| STMS041307-22 | Title: FLOOR FRAMING | dti • design • tech • inc | Drawn By: . Date: . / Revised By: . Date: . | Model No. 1458 | Pg. 8 |
|---|---|---|---|---|---|

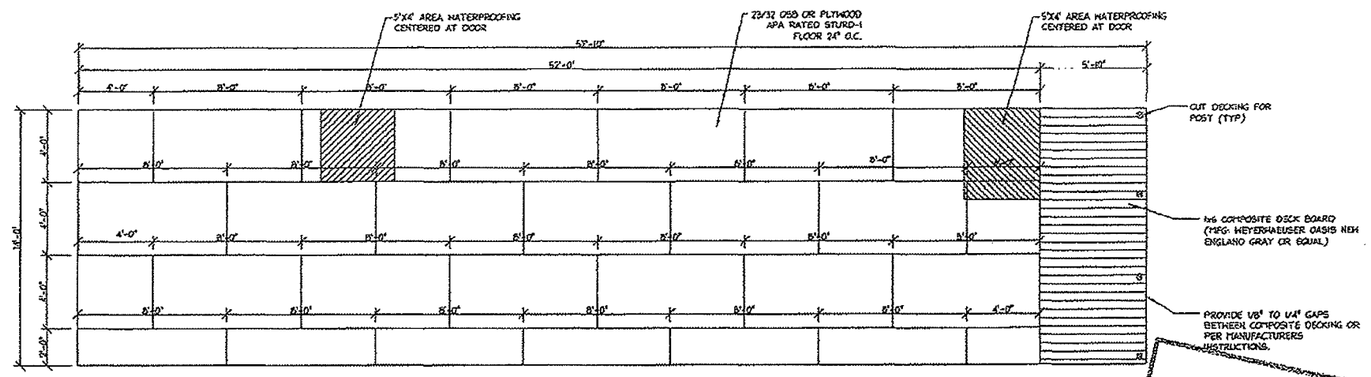


## FLOOR DECKING

NOTE: FULL WIDTH DECKING OPTIONAL.

FRAMING NOTES:

1. PERIMETER RAIL TO TRANSVERSE JOIST (8) .131x3" P.D. NAILS.
2. PERIMETER SPLICE 4x4x20 GA CONNECTOR EACH SIDE OR EQUAL.
3. DOUBLE JOIST .131x3" P.D. NAILS 2 ROWS 12" O.C. STAGGERED.
4. 23/32 OSB OR PLYWOOD APA RATED STURD-I-FLOOR 24" O.C. DECKING TO JOIST 7/16x1-3/4x16 GA STAPLE OR .099x2" P.D. NAILS 4" O.C. EDGE 8" O.C. FIELD WITH 100% ADHESIVE.
5. ADHESIVE REQUIRED ON T&G AND PERIMETER RAILS.
6. COMPOSITE DECK BOARD TO JOIST (2) #8x2" SCREWS PER JOIST (COMPOSITE DECK BOARD TO BE INSTALLED PER MANUFACTURERS INSTRUCTIONS).
7. BOTTOM BOARD (MFG.: SHEPHARD MOBILEFLEX OR EQUAL) FASTENED WITH 1"x3/4"x16 GA STAPLES 4" O.C.
8. ALL FASTENERS AND CONNECTOR PLATES INTO TREATED LUMBER MUST BE STAINLESS STEEL OR GALVANIZED STEEL APPROVED FOR TREATED LUMBER.
9. BOTTOM BOARD AND INSULATION NOT INSTALLED IN PORCH AREA.
10. MULTIPLE JOIST FASTENED TOGETHER WITH (2) ROWS OF .131"x3" P.D. NAILS. OR 7/16"x2 1/2"x15GA. STAPLES 6" O.C. WITH 100% ADHESIVE.
11. ALL DECKING SEAMS MUST BE SANDED UNDER LINOLEUM OR TILE

APPROVED BY

JUN 22 2007

NTA INC

APPROVED BY STATE FIRE MARSHAL'S OFFICE STATE OF MISSISSIPPI

NADER TOMASBI REGISTERED PROFESSIONAL ENGINEER 16679 06/19/2007 STATE OF MISSISSIPPI

| STMS041307-22 | Title: FLOOR DECKING | dti ◆design◆tech◆inc◆ | Drawn By: . Date: . / Revised By: . Date: . | Model No. 1458 | Pg. 9 |
|---|---|---|---|---|---|

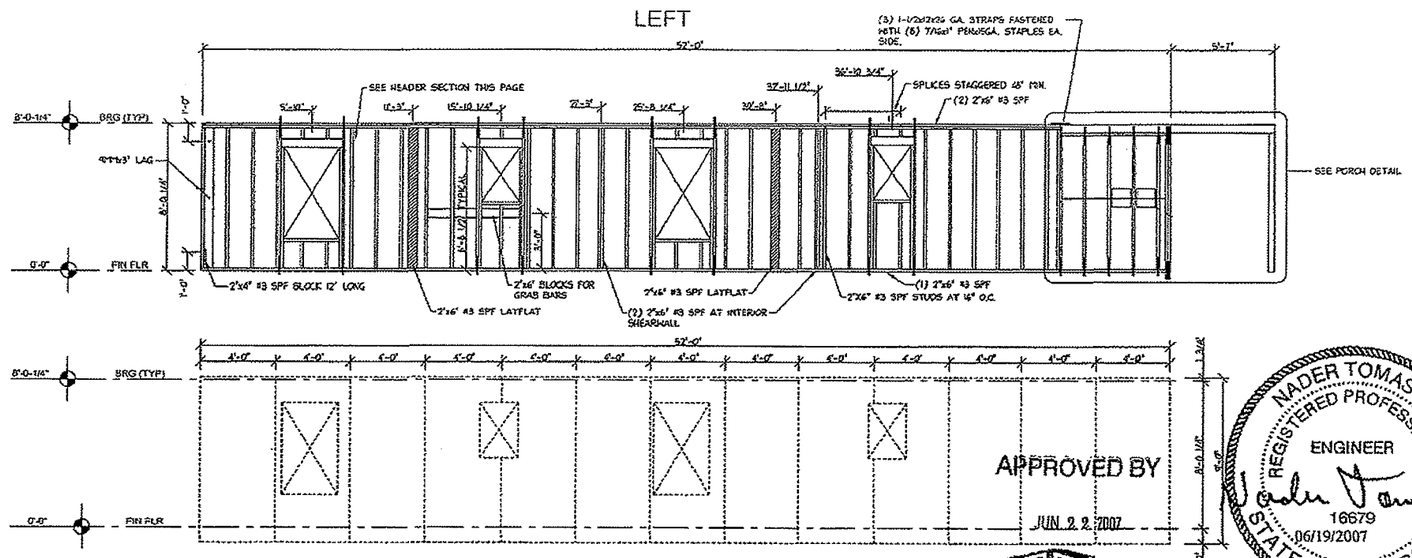


NTA INC

## STUD PLACEMENT & SHEATHING ELEVATIONS

WALL FRAMING NOTES:

1. FASTEN WALL TO FLOOR WITH (3) #8x3" SCREWS OR (3) .131"x3" P.D. NAILS EVERY 16" O.C.
2. FASTEN 1/2" DRYWALL TO STUDS WITH #6x1 1/4" DRY WALL SCREWS OR 1-5/8" DRYWALL NAILS 8" O.C. EDGES AND #6x1-1/4" DRYWALL SCREWS 16" O.C. FIELD WITH 100% ADHESIVE

2.A 1/2" DRYWALL INSTALLED HORIZONTAL ON ALL WALLS GREATER THAN 48".

3. FASTEN TOP AND BOTTOM PLATES TO STUDS WITH (5) .131"x3" P.D. NAILS OR (7) .7/16"x2-1/2"x15 GAUGE STAPLES
4. FASTEN DOUBLE TOP PLATES WITH .131"x3" P.D. NAILS OR 7/16"x2-1/2"x15 GAUGE STAPLES 6" O.C.
5. FASTEN 7/16" OSB OR 15/32" PLYWOOD RATED SHEATHING 32/16" INDEX TO STUDS WITH 7/16"x1-1/2" 15 GAUGE STAPLES 6" O.C. EDGES AND FIELD
6. 7/16" OSB OR 15/32" PLYWOOD 4'x9' RATED SHEATHING 32/16 INDEX CONTINUOUS OVER JOINTS BETWEEN FLOOR/WALL AND WALL/ROOF EXCEPT AT FRONT ENDWALL.
7. FASTENING OF SHEATHING TO PERIMETER FLOOR JOIST AND ROOF EDGE RAIL 7/16"x1-1/2"x15 GAUGE STAPLES 3"O.C.
8. FASTEN SHEATHING TO ENDWALLS AND WITHIN 4' OF CORNER ON SIDE WALLS WITH 7/16"x2-1/2"x15 GAUGE STAPLES 3" O.C. EDGE, 6" O.C. FEILD.
9. HEADERS AND SILLS FASTEN TO STUD WITH (5) .131"x3" P.D. NAILS OR (7) 7/16"x2-1/2"x15 GAUGE STAPLES EACH END EACH MEMBER.
10. MULTIPLE STUDS FASTEN ON TOGETHER WITH .131"x3" P.D. NAILS OR 7/16"x2-1/2"x15 GAUGE STAPLE 6" O.C.
11. WALL TO WALLS FASTENED TOGETHER WITH .131"x3" P.D. NAILS OR #8x3" SCREW 10" O.C PLUS (3) 5/8"x3" LAGS (ONE LAG 1" FROM TOP AND BOTTOM OF STUD AND ONE LAG AT MID-POINT).
12. STRAP EACH STUD TO RIM JOIST AT DOORS AND WINDOWS (SIDEWALL) WITH 1-1/2"x12"x26 GAUGE. STRAP FASTENERS WITH (6) 7/16"x1" PEN x15 GA STAPLES OR (8) .120x1-1/2" P.D. NAIL EACH END AND AT 2X6 HEADER AT PORCH AS SHOWN.
13. HOUSE WRAP INSTALLED PER MANUFACTURERS INSTRUCTIONS.
14. EXTERIOR SIDING INSTALLED PER MANUFACTURERS INSTRUCTIONS FOR HIGH WIND
15. WINDOWS INSTALLED PER MANUFACTURERS INSTRUCTIONS FOR DP RATING 54.2 MIN.
16. IMPACT RESISTANCE MUST BE MET FOR WINDOWS AND DOORS.
17. SPLICE BOTTOM PLATE AND LOWER TOP PLATE 3"x5"x20" GAUGE CONNECTOR PLATE EACH SIDE OR EQUAL.
18. FASTEN ENDWALL TO SIDEWALL TOP PLATES WITH 3"x6"x.055 PLATE WITH (6) .131"x3" P.D. NAILS EACH SIDE EQUAL.
19. NOTCHING IN STUDS SHALL BE PER IRC R602.6 OR HUD 3280.305g

HEADER SECTION
SCALE: NONE

ALT. HEADER SECTION
SCALE: NONE

APPROVED BY
STATE FIRE MARSHAL'S OFFICE
STATE OF MISSISSIPPI
DATE 6/19/07

| | | | | | |
|---|---|---|---|---|---|
| STMS041307-22 | Title: LEFT SIDEWALL | dti ◆design-tech-inc◆ | Drawn By: . Date: . / Revised By: . Date: . | Model No. 1458 | Pg. 10 |

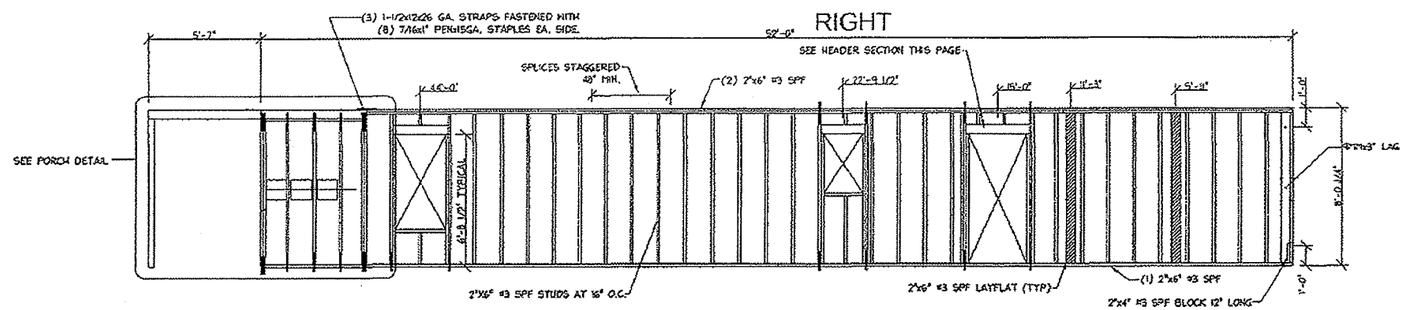


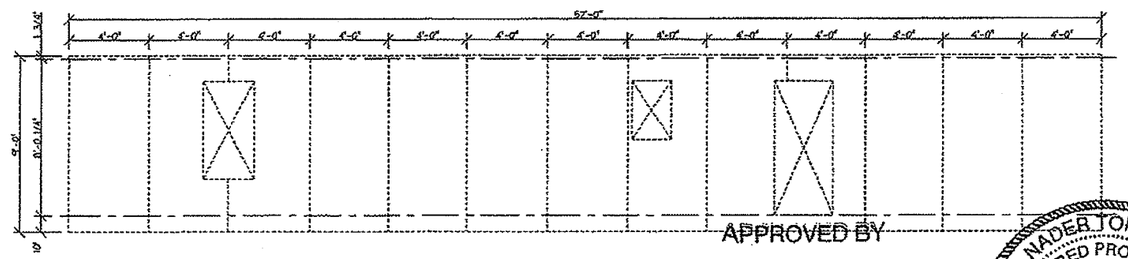


APPROVED BY

JUN 22 2007

NIA INC

## STUD PLACEMENT & SHEATHING PLAN 1A- ELEVATION B

WALL FRAMING NOTES:

1. FASTEN WALL TO FLOOR WITH (3) #8x3" SCREWS OR (3) .131"x3" P.D. NAILS EVERY 16" O.C.
2. FASTEN 1/2" DRYWALL TO STUDS WITH #6x1 1/4" DRY WALL SCREWS OR 1-5/8" DRYWALL NAILS 8" O.C. EDGES AND #6x1-1/4" DRYWALL SCREWS 16" O.C. FIELD WITH 100% ADHESIVE
2.A 1/2" DRYWALL INSTALLED HORIZONTAL ON ALL WALLS GREATER THAN 48".
3. FASTEN TOP AND BOTTOM PLATES TO STUDS WITH (5) .131"x3" P.D. NAILS OR (7) 7/16"x2-1/2"x15 GAUGE STAPLES
4. FASTEN DOUBLE TOP PLATES WITH .131"x3" P.D. NAILS OR 7/16"x2-1/2"x15 GAUGE STAPLES 6" O.C.
5. FASTEN 7/16" OSB OR 15/32" PLYWOOD RATED SHEATHING 32/16" INDEX TO STUDS WITH 7/16"x1-1/2" 15 GAUGE STAPLES 6" O.C. EDGES AND FIELD
6. 7/16" OSB OR 15/32" PLYWOOD 4'x9' RATED SHEATHING 32/16 INDEX CONTINUOUS OVER JOINTS BETWEEN FLOOR/WALL AND WALL/ROOF EXCEPT AT FRONT ENDWALL.
7. FASTENING OF SHEATHING TO PERIMETER FLOOR JOIST AND ROOF EDGE RAIL 7/16"x1-1/2"x15 GAUGE STAPLES 3"O.C.
8. FASTEN SHEATHING TO ENDWALLS AND WITHIN 4' OF CORNER ON SIDE WALLS WITH 7/16"x2-1/2"x15 GAUGE STAPLES 3" O.C. EDGE, 6" O.C. FIELD.
9. HEADERS AND SILLS FASTEN TO STUD WITH (5) .131"x3" P.D. NAILS OR (7) 7/16"x2-1/2"x15 GAUGE STAPLES EACH END EACH MEMBER.
10. MULTIPLE STUDS FASTEN ON TOGETHER WITH .131"x3" P.D. NAILS OR 7/16"x2-1/2"x15 GAUGE STAPLE 6" O.C.
11. WALL TO WALLS FASTENED TOGETHER WITH .131"x3" P.D. NAILS OR #8x3" SCREW 10" O.C PLUS (3) 4"x1/2" LAGS (ONE LAG 1' FROM TOP AND BOTTOM OF STUD AND ONE LAG AT MID-POINT).
12. STRAP EACH STUD TO RIM JOIST AT DOORS AND WINDOWS (SIDEWALL) WITH 1-1/2"x12"x26 GAUGE, STRAP FASTENERS WITH (6) 7/16"x1" PEN x5 GA STAPLES OR (6) .120x1-1/2" P.D. NAIL EACH END AND AT 2X6 HEADER AT PORCH AS SHOWN.
13. HOUSE WRAP INSTALLED PER MANUFACTURERS INSTRUCTIONS.
14. EXTERIOR SIDING INSTALLED PER MANUFACTURERS INSTRUCTIONS FOR HIGH WIND
15. WINDOWS INSTALLED PER MANUFACTURERS INSTRUCTIONS FOR DP RATING 54.2 PSF.
16. IMPACT RESISTANCE MUST BE MET FOR WINDOWS AND DOORS.
17. SPLICE BOTTOM PLATE AND LOWER TOP PLATE 9"x5'x20# GAUGE CONNECTOR PLATE EACH SIDE OR EQUAL.
18. FASTEN ENDWALL TO SIDEWALL TOP PLATES WITH 3"x6"x.035 PLATE WITH (4) .131"x3" P.D. NAILS EACH SIDE EQUAL.
19. NOTCHING IN STUDS SHALL BE PER IRC R602.6 OR HUD 9280.305g

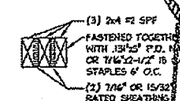


HEADER SECTION
SCALE: NONE

ALT. HEADER SECTION
SCALE: NONE

NADER TOMASBI
REGISTERED PROFESSIONAL ENGINEER
16679
06/19/2007
STATE OF MISSISSIPPI

APPROVED BY STATE FIRE MARSHAL'S OFFICE STATE OF MISSISSIPPI
DATE: 6/29/07

| | | | | | |
|---|---|---|---|---|---|
| STMS041307-22 | Title: RIGHT SIDEWALL | dti ◆design◆tech◆inc◆ | Drawn By: . Date: . / Revised By: . Date: . | Model No. 1458 | Pg. 11 |

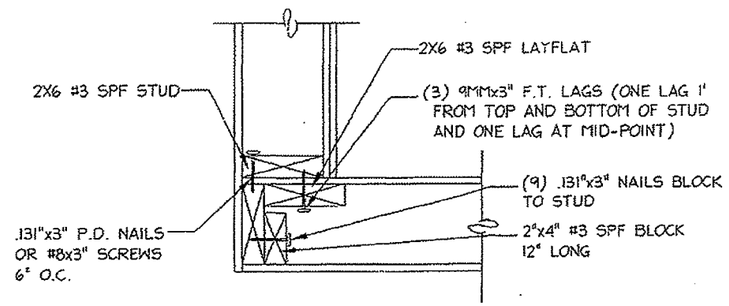


CORNER STUD DETAIL

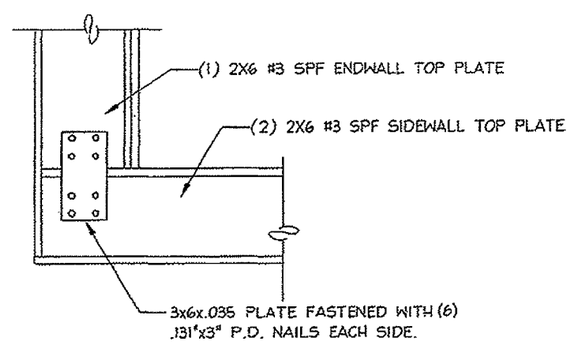


CORNER TOP PLATE DETAIL

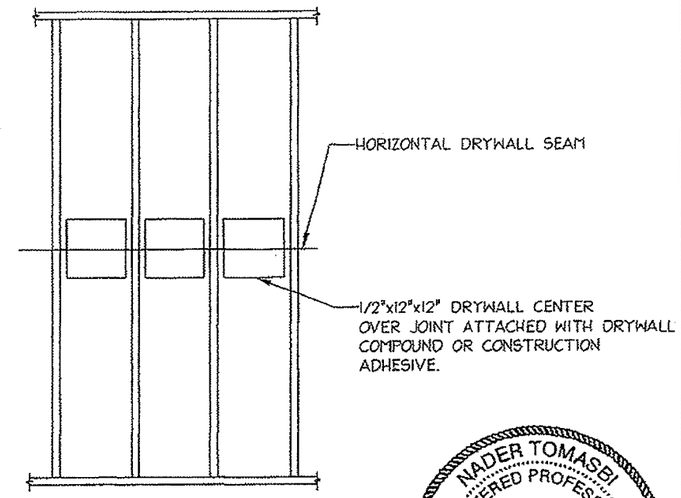


DRYWALL JOINT REINFORCEMENT DETAIL

NOTE:
OPTIONAL REINFORCEMENT MAY BE USED AT THE APPROVAL OF THE ENGINEER OF RECORD.

NADER TOMASBI
REGISTERED PROFESSIONAL ENGINEER
16679
06/19/2007
STATE OF MISSISSIPPI

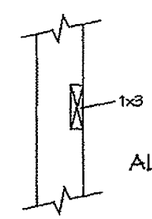


ALT. NOTCH DETAIL

APPROVED BY
JUN 29 2007
NIA INC.

| | | | | | |
|---|---|---|---|---|---|
| STMS041307-22 | Title: SIDEWALL DETAILS | dti ◆design◆tech◆inc◆ | Drawn By: Date: / Revised By: Date: | Model No. 1458 | Pg. 12 |

APPROVED
STATE FIRE MARSHAL'S OFFICE
STATE OF MISSISSIPPI
DATE: 6/29/07

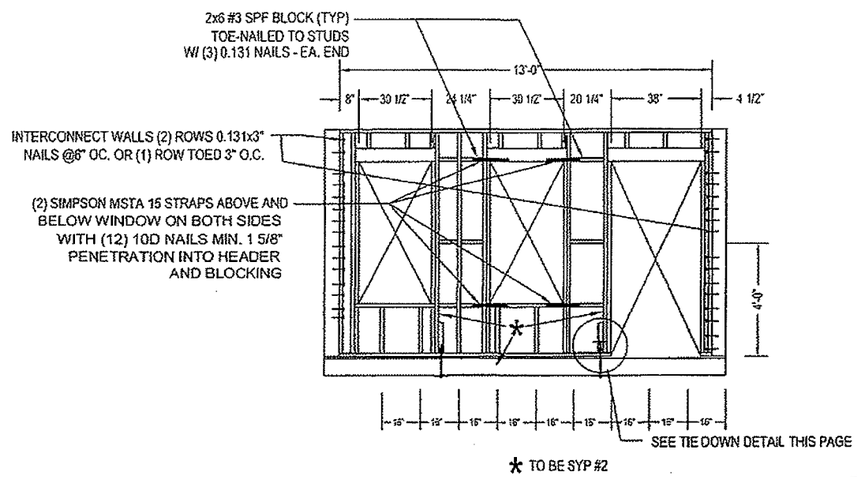


* TO BE SYP #2

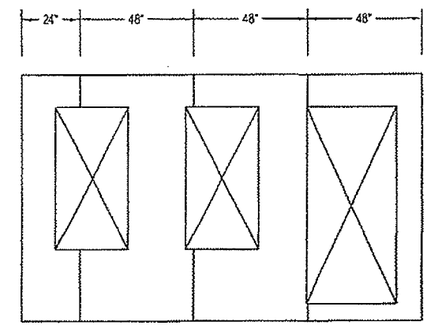


7/16" APA RATED SHEATHING WITH STUDS AT 16" O.C. BOTH FACES, WITH .131x3" NAILS AT 3" O.C. EDGE AND 6" O.C. FIELD PANEL FORCE 582 PLF.

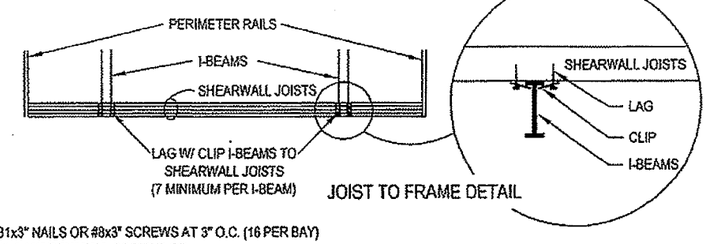


JOIST TO FRAME DETAIL

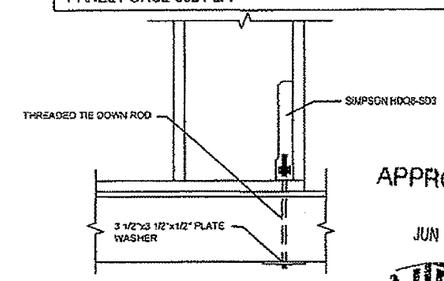


ALTERNATIVE
TIE DOWN DETAIL
SCALE: NONE

APPROVED BY
JUN 22 2007
NIA INC

WALL FRAMING NOTES:

1. FASTEN BOTTOM PLATE TO JOIST WITH .131x3" NAILS OR #8x3" SCREWS AT 3" O.C. (16 PER BAY)
2. FASTEN 1/2" DRYWALL TO STUDS WITH #6 X 1 1/4" DRY WALL SCREWS OR 1 5/8" DRYWALL NAILS 8"O.C. EDGES 16" O.C. FIELD WITH 100% ADHESIVE
3. FASTEN TOP AND BOTTOM PLATES TO STUDS WITH (3) .131X3"P.D. NAILS OR (4) 7/16 X 21/2 X 15 GAUGE STAPLES
4. FASTEN DOUBLE TOP PLATES WITH 0.131 X 3" P.D. NAILS 6" O.C. OR 7/16 X 2 1/2 X 15 GAUGE STAPLES 4" O.C.
5. FASTENING OF SHEATHING TO PERIMETER FLOOR JOIST AND ROOF EDGE RAIL 7/16 X 1 1/2 X 15 GAUGE STAPLES 3" O.C.
6. FASTEN SHEATHING TO ENDWALLS AND WITHIN 4' OF CORNER ON SIDE WALLS WITH 7/16 X 2 1/2 X 15 GAUGE STAPLES 3" O.C. EDGE, 6" O.C. FIELD MIN.
7. HEADERS AND SILLS FASTEN TO STUD WITH (5) .131X3" P.D. NAILS OR (7) 7/16 X 2 1/2 X 15 GAUGE STAPLES EACH AND EACH MEMBER.
8. MULTIPLE STUDS FASTEN ON TOGETHER WITH .131 X 3" P.D. NAILS OR 7/16 X 2 1/2 X 15 GAUGE STAPLE 2" O.C.
9. STRAP EACH STUD TO RIM JOIST AT DOORS AND WINDOWS WITH 1 1/2 X 12" X 26 GAUGE. STRAP FASTENERS WITH (8) 7/16 X 1 PEN X 15 GA STAPELS OR (8) .120 X 1 1/2 P.D. NAIL EACH END.
10. HOUSE WRAP INSTALLED PER MANUFACTURERS INSTRUCTIONS.
11. EXTERIOR SIDING INSTALLED PER MANUFACTURERS INSTRUCTIONS FOR HIGH WIND
12. WINDOWS INSTALLED PER MANUFACTURERS INSTRUCTIONS FOR DP RATING 52.5 MIN.
13. SPLICE BOTTOM PLATE AND LOWER TOP PLATE 3X5X20 GAUGE CONNECTOR PLATE EACH SIDE OR 12" 2x6 BLOCK.
14. FASTEN ENDWALL TO SIDEWALL TOP PLATES WITH 3"x6"x.035 PLATE WITH (4) .13x3" NAILS EACH SIDE EQUAL.

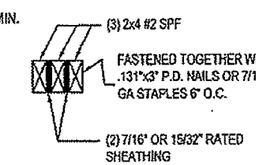


HEADER SECTION
SCALE: NONE

NADER TOMASBI
REGISTERED PROFESSIONAL
ENGINEER
16679
06/19/2007
STATE OF MISSISSIPPI

| | | | | | |
|---|---|---|---|---|---|
| STMS041307-22 | Title: Front Shearwall | dti design • tech • inc | Drawn By: . Date: . Revised By: . Date: . | Model No. 1458 | Pg. 13 A |

APPROVED BY
STATE FIRE MARSHAL'S OFFICE
STATE OF MISSISSIPPI
DATE: 6/26/07

WALL FRAMING NOTES:

1. FASTEN WALL TO FLOOR AND WALL TO CEILING WITH (7) # 8X3" SCREWS PER BAY
2. FASTEN 1/2" DRYWALL TO STUDS WITH #6 X 1 1/4" DRY WALL SCREWS OR 1 5/8" DRYWALL NAILS 8" O.C. EDGES 16" O.C. FIELD WITH 100% ADHESIVE
3. FASTEN TOP AND BOTTOM PLATES TO STUDS WITH (3) 0.131x3" P.D. NAILS OR (3) 7/16"x2 1/2"x15 GAUGE STAPLES
4. HEADERS FASTEN TO STUD WITH (3) 0.131x3" P.D. NAILS OR (3) 7/16"x2 1/2"x15 GAUGE STAPLES EACH AND EACH MEMBER.
5. WALL TO WALLS FASTENED TOGETHER WITH 0.131x3" P.D. NAILS OR #8x3" SC. 4" O.C. DIRECT OR TOED.

7/16" APA RATED SHEATHING WITH STUDS AT 16" O.C. ON BOTH SIDES, WITH 0.131x3" NAILS AT 4" O.C. EDGE AND 6" O.C. FIELD OR 15 GA STAPLES 3" O.C. AND 12" FIELD. STAGGER NAILS IN DOUBLE STUDS AT PANEL EDGES SHEARWALL PANEL FORCE 642 PLF.

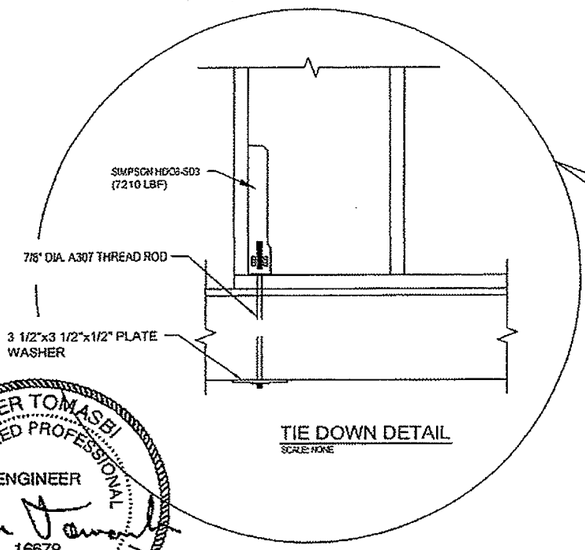


TIE DOWN DETAIL
SCALE: NONE

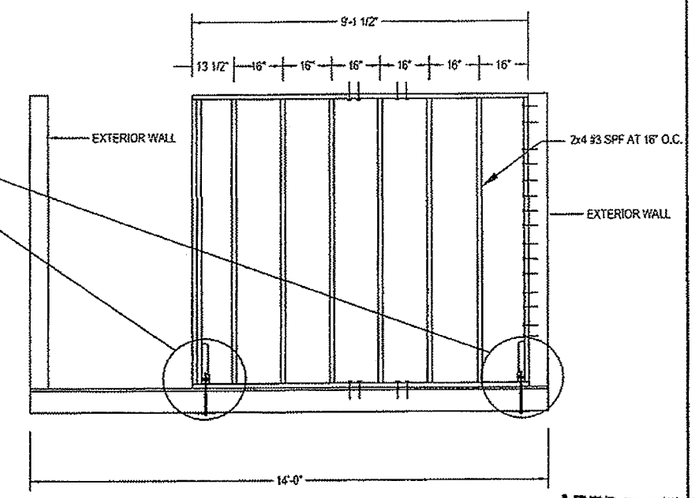


NADER TOMASEI
REGISTERED PROFESSIONAL ENGINEER
16679
06/19/2007
STATE OF MISSISSIPPI

APPROVED BY
JUN 22 2007
NIA INC

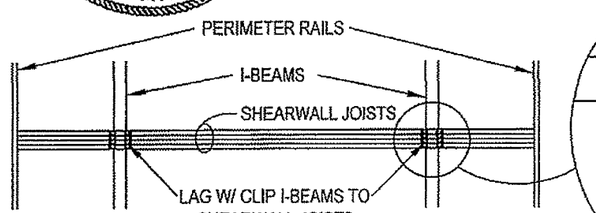


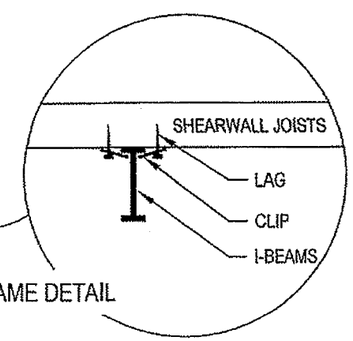


JOIST TO FRAME DETAIL

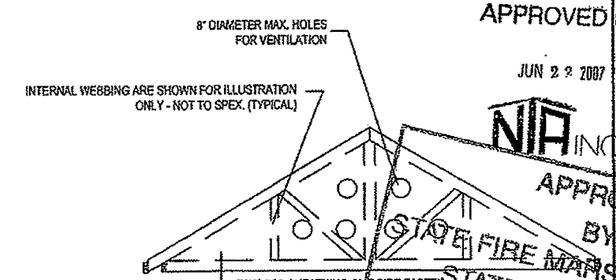


INTERIOR SHEARWALL TRUSS
SCALE: NONE

APPROVED BY STATE FIRE MARSHAL'S OFFICE
STATE OF MISSISSIPPI
DATE: 6/26/07

| | | | | | |
|---|---|---|---|---|---|
| STMS041307-22 | Title: Interior Shearwall | dti design-tech-inc | Drawn By: . Date: . / Revised By: . Date: . | Model No. 1458 | Pg. 13.B |

7/16" OSB APA RATED SHEATHING WITH STUDS AT 16" O.C. OR 15/32 PLYWOOD RATED SHEATHING WITH 0.131x3" NAILS AT 6" O.C. EDGE AND 6" O.C. FIELD OR 15 GAGE STAPLES AT 4" O.C. EDGE AND 6" O.C. FIELD. SHEARWALL PANEL FORCE IS 280 PLF.

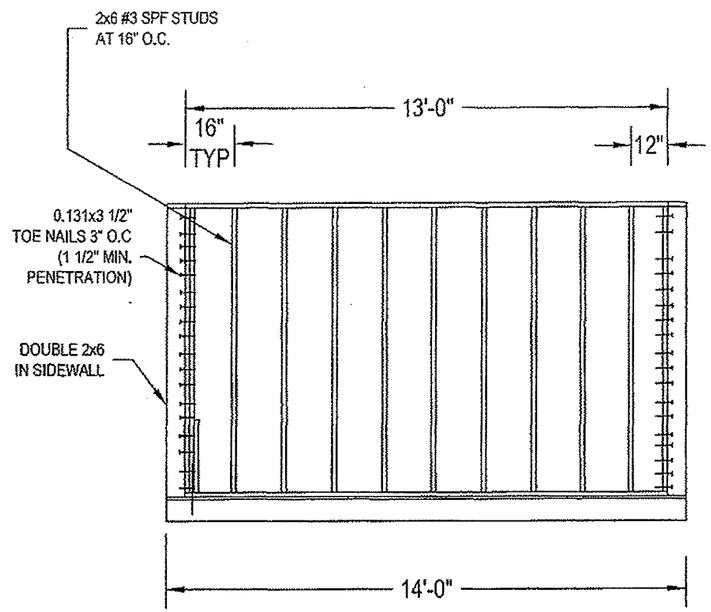


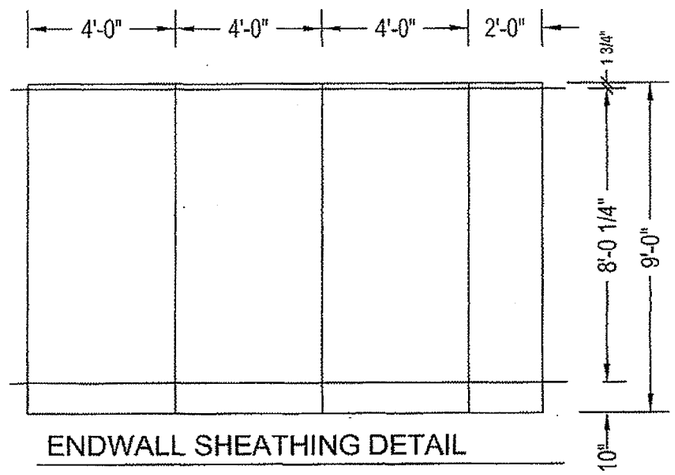


ENDWALL SHEATHING DETAIL

STUDS WILL BE UNDER WINDOW

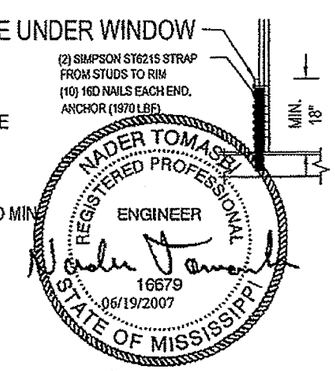


WALL FRAMING NOTES:

1. FASTEN BOTTOM PLATE TO JOIST WITH .131x3" NAILS OR #8x3" SCREWS AT 3" O.C. (16 PER BAY)
2. FASTEN 1/2" DRYWALL TO STUDS WITH #6 X 1 1/4" DRY WALL SCREWS OR 1 5/8" DRYWALL NAILS 8"O.C. EDGES 16" O.C. FIELD WITH 100% ADHESIVE
3. FASTEN TOP AND BOTTOM PLATES TO STUDS WITH (3) .131X3"P.D. NAILS OR (4) .7/16 X 21/2 X 15 GAUGE STAPLES
4. FASTEN DOUBLE TOP PLATES WITH 0.131 X 3" P.D. NAILS 6" O.C. OR 7/16 X 2 1/2 X 15 GAUGE STAPLES 4" O.C.
5. FASTENING OF SHEATHING TO PERIMETER FLOOR JOIST AND ROOF EDGE RAIL 7/16 X 1 1/2 X 15 GAUGE STAPLES 3" O.C.
6. FASTEN SHEATHING TO ENDWALLS AND WITHIN 4' OF CORNER ON SIDE WALLS WITH 7/16 X 2 1/2 X 15 GAUGE STAPLES 3" O.C. EDGE, 6" O.C. FEILD MIN
7. HEADERS AND SILLS FASTEN TO STUD WITH (5) .131X3" P.D. NAILS OR (7) 7/16 X 2 1/2 X 15 GAUGE STAPLES EACH AND EACH MEMBER.
8. MULTIPLE STUDS FASTEN ON TOGETHER WITH .131 X 3" P.D. NAILS OR 7/16 X 2 1/2 X 15 GAUGE STAPLE 2" O.C. OR #8x3" SCREW
9. . STRAP EACH STUD TO RIM JOIST AT DOORS AND WINDOWS WITH 1 1/2 X 12" X 26 GAUGE. STRAP FASTENERS WITH (8) 7/16 X 1 PEN X 15 GA STAPELS OR (8) .120 X 1 1/2 P.D. NAIL EACH END.
10. HOUSE WRAP INSTALLED PER MANUFACTURERS INSTRUCTIONS.
11. EXTERIOR SIDING INSTALLED PER MANUFACTURERS INSTRUCTIONS FOR HIGH WIND
12. WINDOWS INSTALLED PER MANUFACTURERS INSTRUCTIONS FOR DP RATING 52.5 MIN.
13. SPLICE BOTTOM PLATE AND LOWER TOP PLATE 3X5X20 GAUGE CONNECTOR PLATE EACH SIDE OR 12" 2x6 BLOCK.
14. FASTEN ENDWALL TO SIDEWALL TOP PLATES WITH 3"x6"x.035 PLATE WITH (4) .13x3" NAILS EACH SIDE EQUAL.

NADER TOMASH
REGISTERED PROFESSIONAL
ENGINEER
16679
06/19/2007
STATE OF MISSISSIPPI

APPROVED BY

JUN 22 2007

NIA INC

REFER TO PAGE 13.A FOR
JOIST TO FRAME DETAIL

APPROVED
BY
STATE FIRE MARSHAL'S OFFICE
1458 STATE OF MISSISSIPPI
DATE: 6/29/07

| | | | | | |
|---|---|---|---|---|---|
| STMS041307-22 | Title: Rear Shearwall | dti design•tech•inc | Drawn By: . Date: . Revised By: . Date: . | Model No. | 13.C |

3'x6' MAX. WINDOW SIZE x 54.2 PSF=975.2#
SCREWS: 82x1.6x1" PENT. = 131#
975.2/13=7.4 OR 8 SCREWS.

PERIMETER OF SMALLEST
WINDOW (2+3)x2x12-120"

120/8=15" O.C.

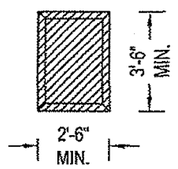


KITCHEN,HALL,BA WINDOW
3-REQ.
1x3 EDGES FRAMING
SQUARE OR 45° CUT
WITH 7/16" OSB COVERING
MINIMUM

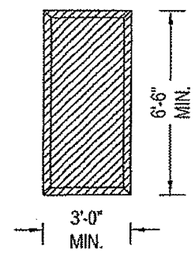


LIVING & DINING ROOM WINDOW
3-REQ.
1x3 EDGES FRAMING
SQUARE OR 45° CUT
WITH 7/16" OSB COVERING
MINIMUM

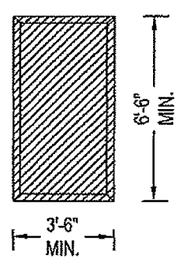


BEDROOM WINDOW
2-REQ.
1x3 EDGES FRAMING
SQUARE OR 45° CUT
WITH 7/16" OSB COVERING
MINIMUM

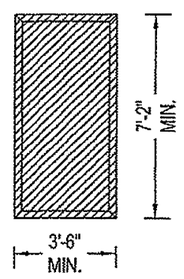


OPTIONAL FRONT DOOR
1-REQ.
1x3 EDGES FRAMING
SQUARE OR 45° CUT
WITH 7/16" OSB COVERING
MINIMUM

HOMES INSTALLED IN WIND-DEBRIS REGIONS MUST HAVE PROVISIONS TO PROTECT THE EXTERIOR GLAZING IN WINDOWS AND DOOR. LOCAL OFFICIAL MUST BE CONSULTED TO DETERMINE IF YOUR SPECIFIC AREA IS LOCATED IN WIND-DEBRIS REGIONS. THE PROTECTION FOR EXTERIOR GLAZING MAY BE PROVIDED.

A 7/16" MINIMUM APA RATE SHEATHING SHALL MUST BE PROVIDED. SHEATHING SHALL BE PRECUT SO THEY SHALL BE ATTACHED TO THE FRAMING SURROUNDING THE OPENING CONTAINING THE PRODUCT WITH THE GLAZED OPENING. PANEL SHALL BE PREDRILLED AS REQUIRED FOR THE FASTENING AND ALL REQUIRED HARDWARE SHALL BE PROVIDED.

NOTE:
PRE-ENGINEERED WINDOW/DOOR PROTECTORS MAY BE INSTALL ON-SITE BY OTHERS. (MUST MEET ALL STATE & LOCAL CODE REQUIREMENTS

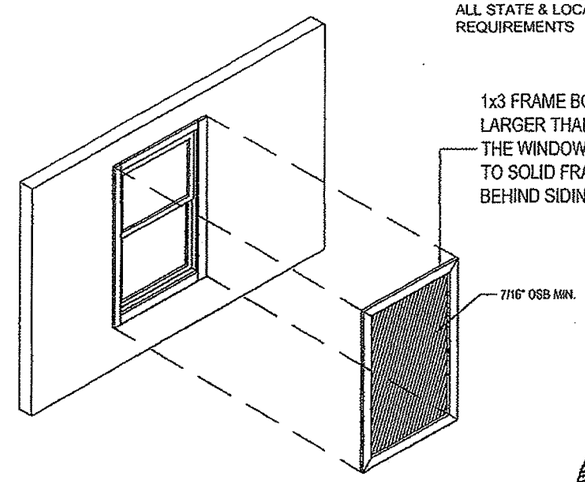


WIND BORNE DEBRIS PROTECTION DETAIL

APPROVED BY
JUN 22 2007
NTA INC

NADER TOMASBI
REGISTERED PROFESSIONAL ENGINEER
16679
06/19/2007
STATE OF MISSISSIPPI

APPROVED
BY
STATE FIRE MARSHAL'S OFFICE
STATE OF MISSISSIPPI
DATE: 4/26/2

| | | | | | |
|---|---|---|---|---|---|
| STMS041307-22 | Title: Ship Loose Window Protectors | dti design • tech • inc | Drawn By: . Date: . / Revised By: . Date: . | Model No. 1458 | Pg. 14 |

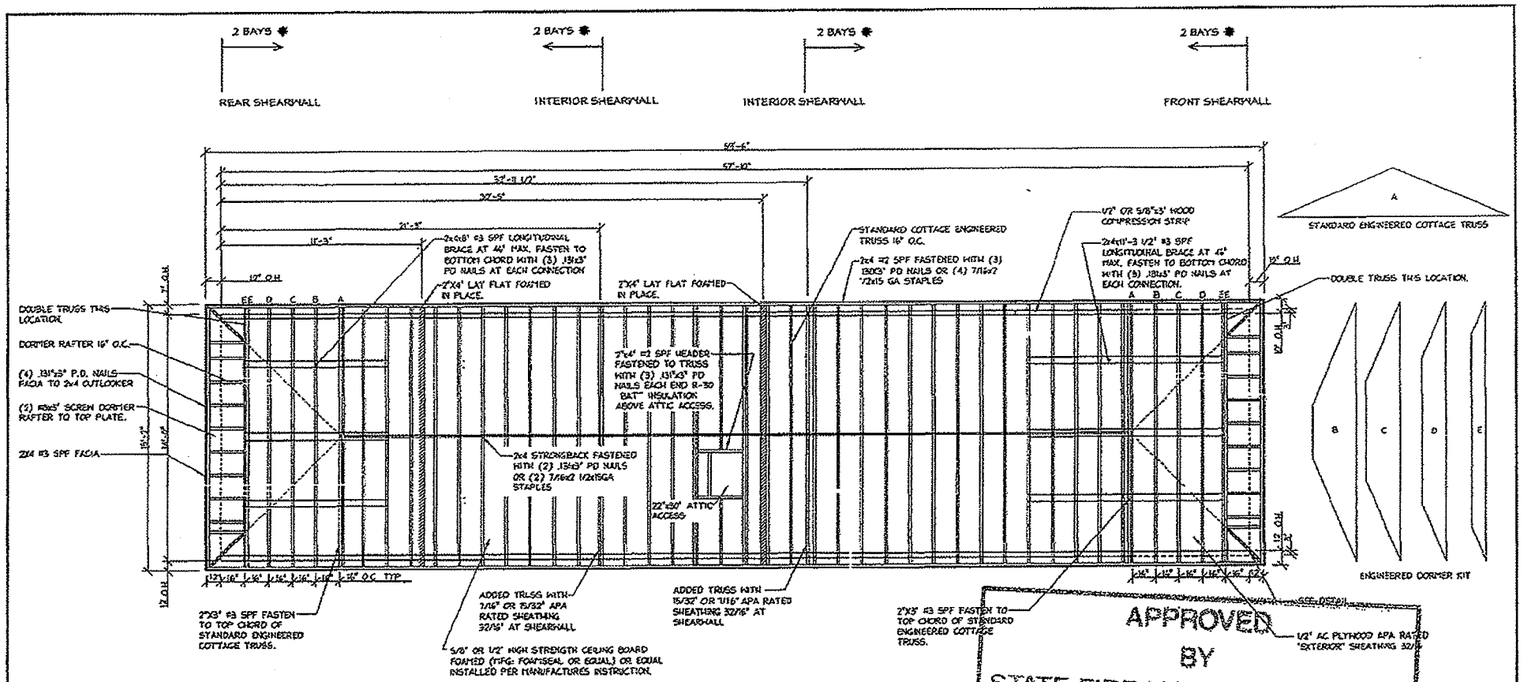


## ROOF FRAMING

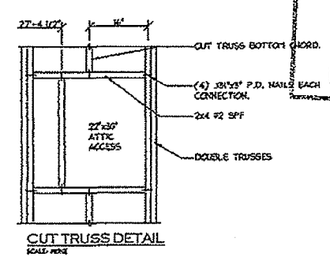


CUT TRUSS DETAIL
SCALE: NONE

1. 15/32" PLYWOOD APA RATED SHEATHING 32/16" ROOF DECKING FASTENED TO TRUSSES WITH 7/16"x1 1/2"x15 GA STAPLES 3" O.C.
2. 15/32" PLYWOOD APA RATED SHEATHING 32/16 FASTENED TO END TRUSSES AT SHEARWALL AND AT INTERIOR SHEARWALL WITH 7/16"x1 1/2"x15 GA STAPLES 3" O.C. TOP AND BOTTOM CORD.
3. 1/2" OR 5/8"x3" WOOD COMPRESSION STRIP ON TOP OF SIDEWALLS ONLY (CUT BACK 1/2" OR 5/8" GYPSUM CEILING BOARD)

APPROVED
BY
STATE FIRE MARSHAL'S OFFICE
STATE OF MISSISSIPPI APPROVED BY
DATE: 6/19/07
JUN 22 2007

NABER TOMASEI
REGISTERED PROFESSIONAL
ENGINEER
16679
06/19/2007
STATE OF MISSISSIPPI

NTA INC

* ROOF DIAPHRAGM BLOCKING REQ'D. BLOCK ROOF SHEATHING AT ALL EDGES IN TRUSS BAYS NOTED ABOVE. FASTEN SHEATHING TO BLOCKS AS SPECIFIED IN PAGES 1.A AND 1.B.
BLOCKS MAY BE 2X3 #3 SPF FASTENED TO TRUSSES WITH (2) 10d NAILS TOED.

| | | | | | |
|---|---|---|---|---|---|
| STMS041307-22 | Title: ROOF FRAMING | dti • design • tech • inc • | Drawn By: . Date: . / Revised By: . Date: . | Model No. 1458 | Pg. 15 |

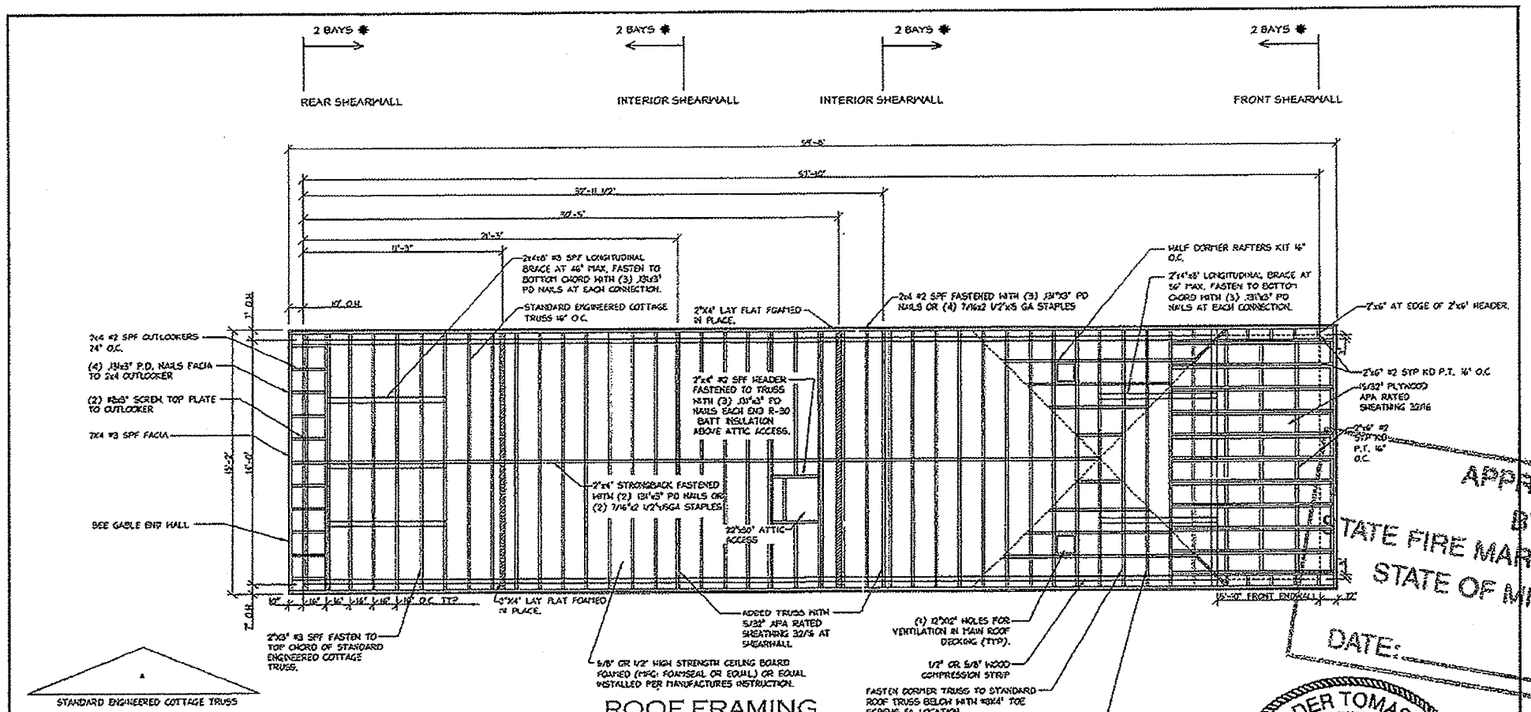


1. 15/32" PLYWOOD APA RATED SHEATHING 32/16" ROOF DECKING FASTENED TO TRUSSES WITH 7/16"x1 1/2"x16 GA STAPLES 3" O.C.
2. 15/32" PLYWOOD APA RATED SHEATHING 32/16 FASTENED TO END TRUSSES AT SHEARWALL AND AT INTERIOR SHEARWALL WITH 7/16"x1 1/2"x16 GA STAPLES 3" O.C. TOP AND BOTTOM CORD.
3. 1/2" OR 5/8"x6" WOOD COMPRESSION STRIP ON TOP OF SIDEWALLS ONLY (CUT BACK 1/2" OR 5/8" GYPSUM CEILING BOARD)

APPROVED BY STATE FIRE MARSHAL'S OFFICE STATE OF MISSISSIPPI DATE: 6/29/07

NADER TOMASBI REGISTERED PROFESSIONAL ENGINEER 16679 06/19/2007 STATE OF MISSISSIPPI

APPROVED BY JUN 22 2007 NIA INC

* ROOF DIAPHRAGM BLOCKING REQ'D. BLOCK ROOF SHEATHING AT ALL EDGES IN TRUSS BAYS NOTED ABOVE. FASTEN SHEATHING TO BLOCKS AS SPECIFIED IN PAGES 1.A AND 1.B. BLOCKS MAY BE 2X3 #3 SPF FASTENED TO TRUSSES WITH (2) 10d NAILS TOED.

| | | | | | |
|---|---|---|---|---|---|
| STMS041307-22 | Title: ROOF FRAMING ELEV. B | dti design·tech·inc | Drawn By: . Date: . Revised By: . Date: . | Model No. 1458 | Pg. 16 |

NADER TOMASBI
REGISTERED PROFESSIONAL
ENGINEER
16679
06/19/2007
STATE OF MISSISSIPPI

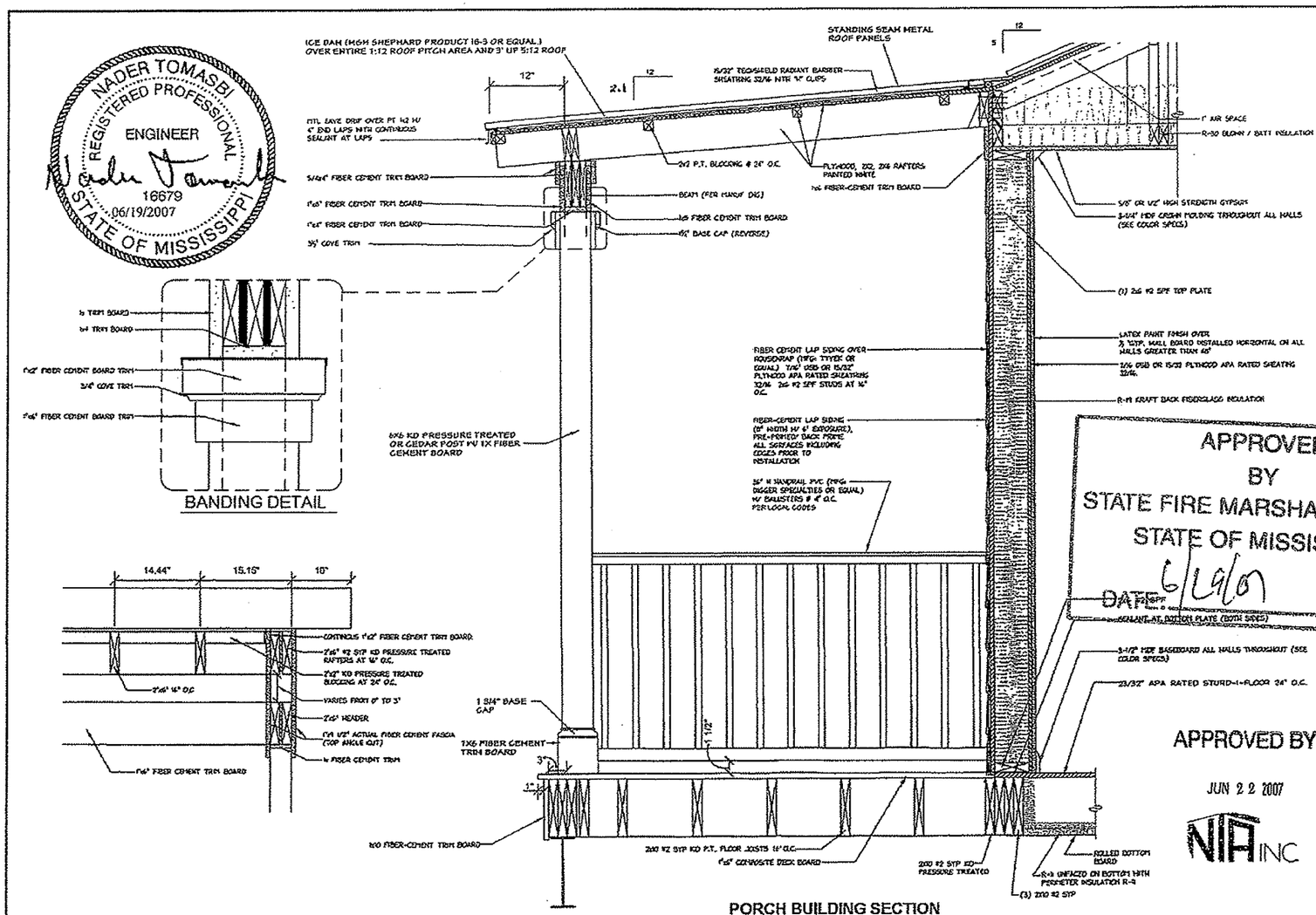


APPROVED
BY
STATE FIRE MARSHAL'S OFFICE
STATE OF MISSISSIPPI
DATE 6/19/07

APPROVED BY
JUN 22 2007
NIA INC

| | | | | | |
|---|---|---|---|---|---|
| STMS041307-22 | Title: **Porch Section** | dti ·design·tech·inc· | Drawn By: . Date: . / Revised By: . Date: . | Model No. **1458** | Pg. **17.A** |

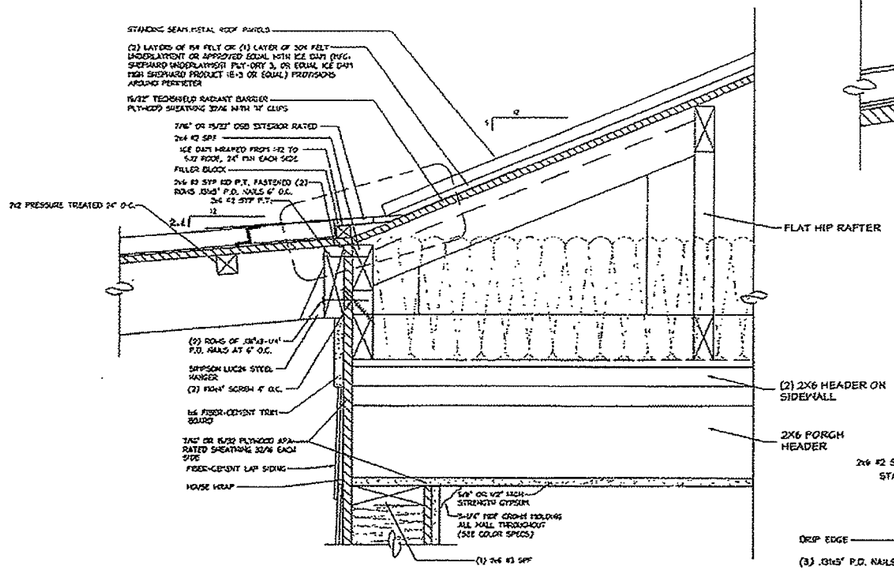


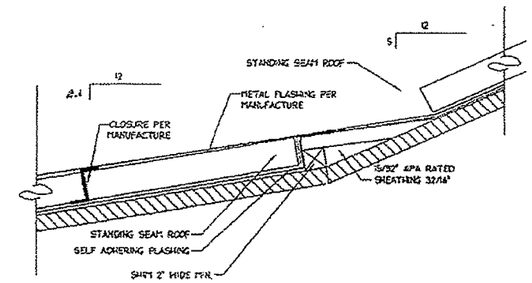


## STANDING SEAM ROOF DETAIL

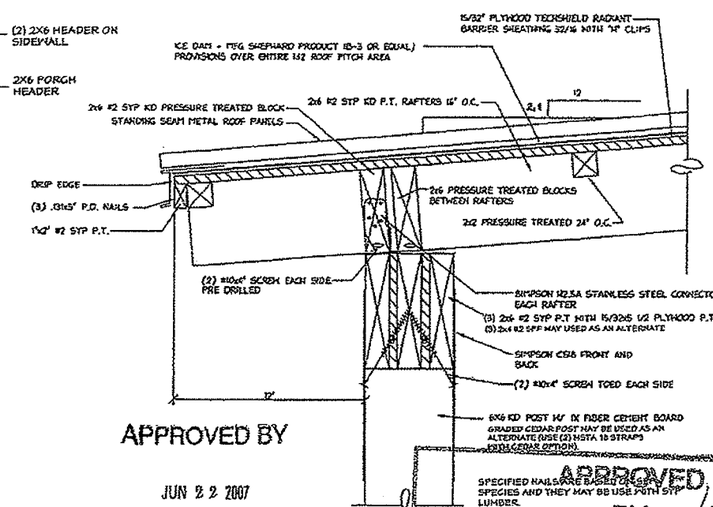


NADER TOMASBI
REGISTERED PROFESSIONAL ENGINEER
16679
06/19/2007
STATE OF MISSISSIPPI

APPROVED BY

JUN 22 2007

NTA INC

APPROVED
BY
STATE FIRE MARSHAL'S OFFICE
STATE OF MISSISSIPPI

| | | | | | |
|---|---|---|---|---|---|
| STMS041307-22 | Title: **Porch Details** | dti ◆design◆tech◆inc◆ | Drawn By: . Date: . / Revised By: . Date: . | Model No. 1458 DATE: | Pg. 17.B |

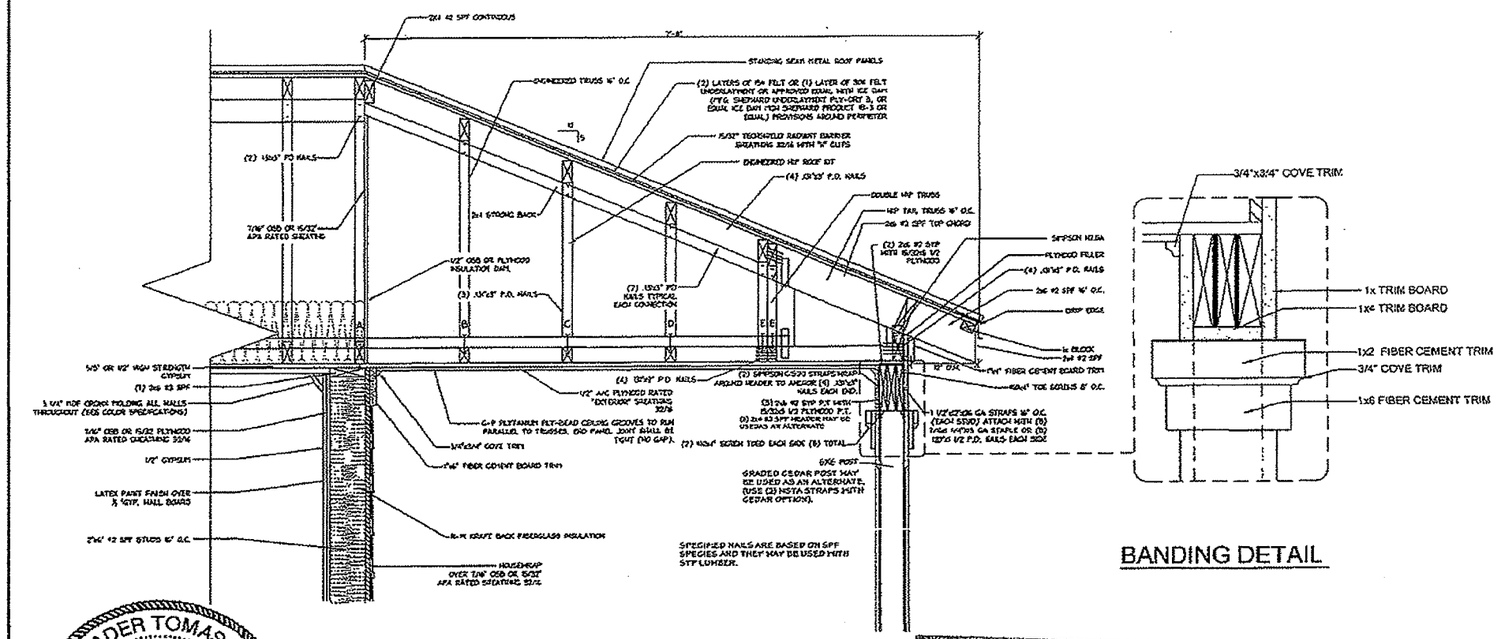


BANDING DETAIL

NADER TOMASBI
REGISTERED PROFESSIONAL ENGINEER
16679
06/19/2007
STATE OF MISSISSIPPI

APPROVED BY
STATE FIRE MARSHAL'S OFFICE
STATE OF MISSISSIPPI
JUN 22 2007
NIA INC
DATE: 6/29/07

| | | | | | |
|---|---|---|---|---|---|
| STMS041307-22 | Title: PORCH SECTION | dti. design • tech • inc | Drawn By: . Date: . / Revised By: . Date: . | Model No. 1458 | Pg. 17.C |

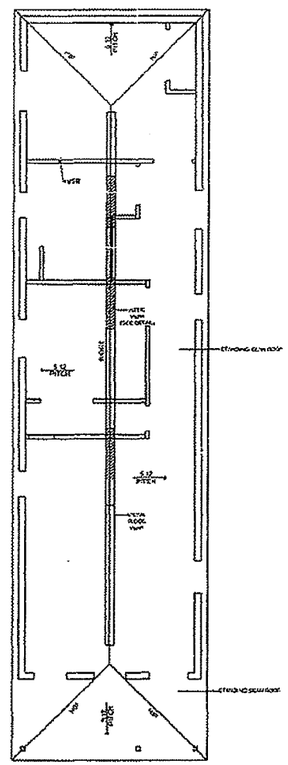

ROOF PLAN

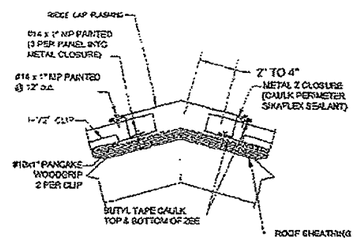


RIDGE / HIP DETAIL

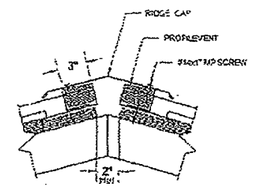


VENTED RIDGE DETAIL

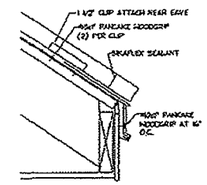


EAVE DETAIL

REQUIRED ATTIC VENTILATION: 2.8 sq. ft.

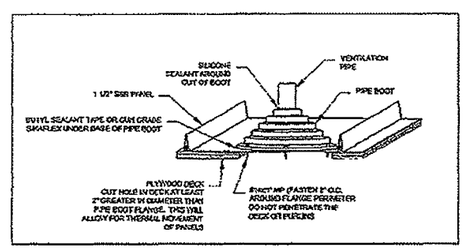


PIPE PENETRATION DETAIL

APPROVED
BY
STATE FIRE MARSHAL'S OFFICE
STATE OF MISSISSIPPI
DATE: 6/20/07
APPROVED BY

JUN 29 2007

NTA INC

NADER TOMASBI
REGISTERED PROFESSIONAL ENGINEER
16679
06/19/2007
STATE OF MISSISSIPPI

NOTE:
STANDING SEAM METAL ROOF SHALL COMPLY WITH ALL STRUCTURAL LOADS AS GIVEN ON THE DESIGN REQUIREMENTS OF THE 2003 INTERNATIONAL RESIDENTIAL CODE AND THE FEDERAL MANUFACTURED HOME CONSTRUCTION AND SAFETY STANDARDS.

| | | | | | |
|---|---|---|---|---|---|
| STMS041307-22 | Title: METAL ROOF DETAILS | dti design·tech·inc | Drawn By: Date: / Revised By: Date: | Model No. 1458 | Pg. 18.A |

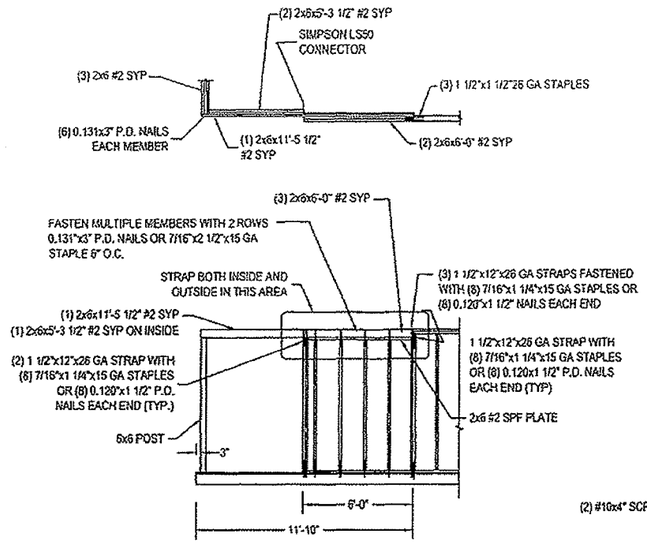


PORCH FRAMING DETAIL

SCALE: NONE

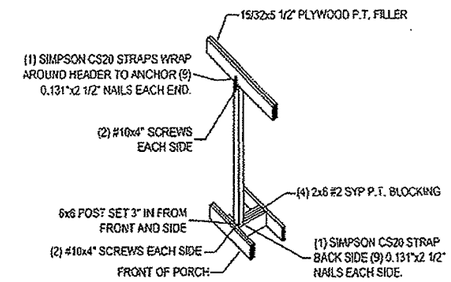


MIDDLE POST DETAIL

SCALE: NONE

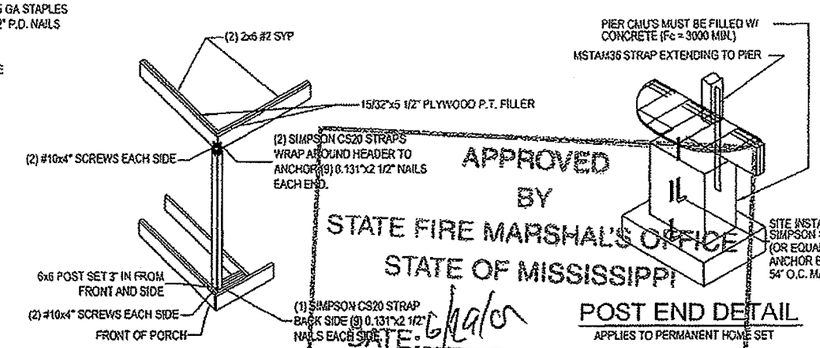


CORNER POST DETAIL

SCALE: NONE

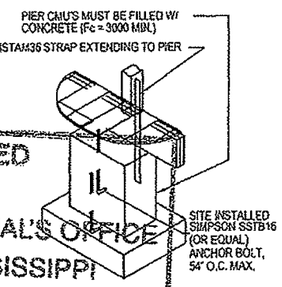


POST END DETAIL

APPLIES TO PERMANENT HOME SET

APPROVED BY STATE FIRE MARSHAL'S OFFICE STATE OF MISSISSIPPI

DATE: 6/19/07

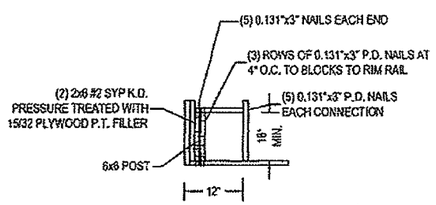


BLOCKING FOR POST CORNER DETAIL

SCALE: NONE

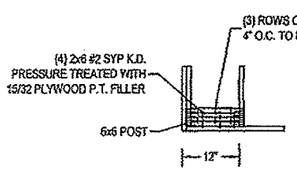


ALT. BLOCKING FOR POST CORNER DETAIL

SCALE: NONE

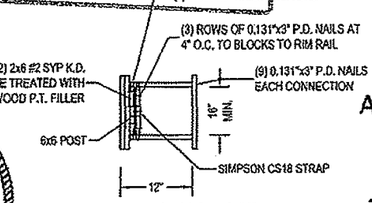


BLOCKING FOR POST MIDDLE DETAIL

SCALE: NONE

NADER TOMASBI REGISTERED PROFESSIONAL ENGINEER 16679 06/19/2007 STATE OF MISSISSIPPI

APPROVED BY

JUN 22 2007

NIA INC

NOTE:
ALL PLYWOOD 15/32 APA RATED SHEATHING 32/16
ALL EXPOSED PLYWOOD PRESSURE TREATED

| STMS041307-22 | Title: Porch Framing Details | dti design•tech•inc | Drawn By: . Date: . Revised By: . Date: . | Model No. 1458 | Pg. 19 |
|---|---|---|---|---|---|

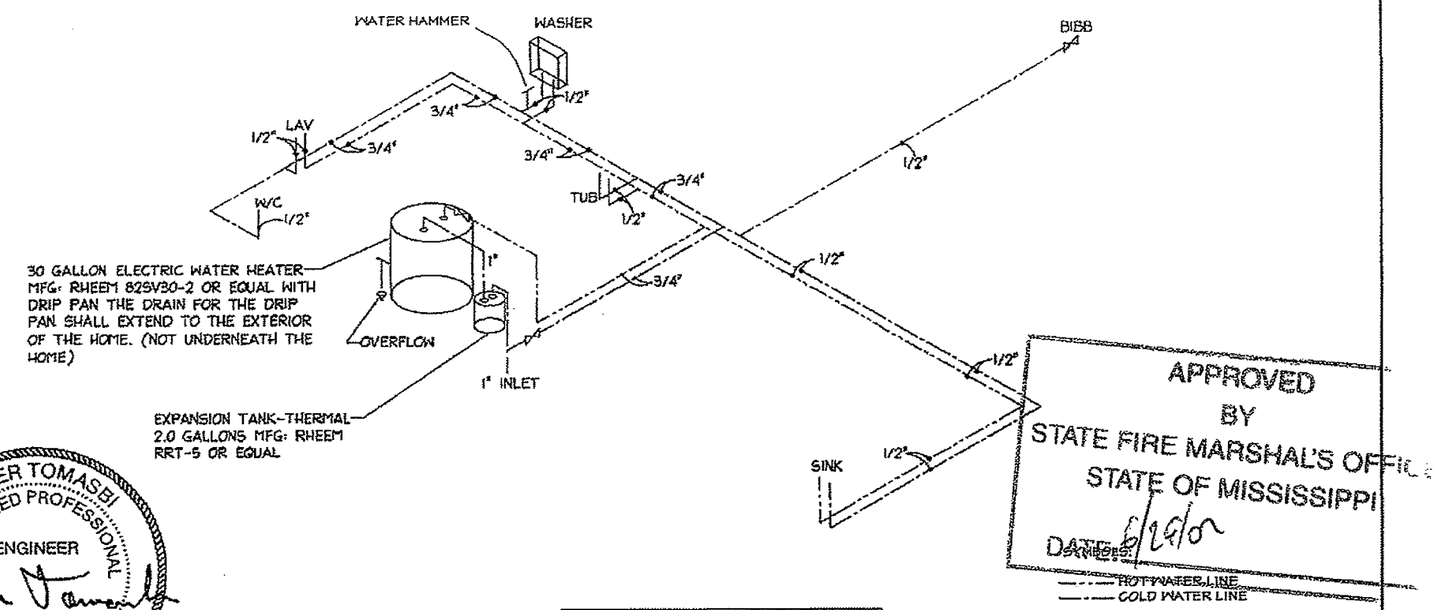


APPROVED BY STATE FIRE MARSHAL'S OFFICE STATE OF MISSISSIPPI
DATE: 6/26/07

NADER TOMASBI REGISTERED PROFESSIONAL ENGINEER 16679 06/19/2007 STATE OF MISSISSIPPI

NOTE:
LAV, WATER CLOSET AND SINK TO HAVE A SEPARATE SHUT-OFF VALVE ON BOTH HOT AND COLD WATER LINES.

ABBREVIATIONS:

| | |
|---|---|
| WC | WATER CLOSET |
| LAV | LAVATORY |
| WASH | WASHER |
| BIBB | HOUSE BIBB |
| CW | COLD WATER |
| HW | HOT WATER |
| VTR | VENT THROUGH ROOF |
| CO | CLEAN OUT |
| BATH | BATH TUB |
| SINK | KITCHEN SINK |

OCEAN SPRINGS, PROVIDE AN EXPANSION TANK OR OTHER DEVICE DESIGNED FOR INTERMITTENT OPERATION FOR THERMAL EXPANSION CONTROL AT THE WATER HEATER IF A BACKFLOW PREVENTER IS ON OR TO BE INSTALLED ON THE WATER LINE OR AT THE METER.

LONG BEACH, PROVIDE A MANIFOLD WITH PROPER LABELING IF PEX TUBING AND FITTINGS ARE INSTALLED ON WATER SYSTEM. FUTHER, SUCH PEX TUBING AND FITTINGS SHALL BE INSTALLED IN ACCORDANCE WITH THE MANUFACTURER'S PUBLISHED INSTRUCTIONS, THE APPLICABLE CODES AND ANY ES REPOR REGARDING THE PARTICULAR PEX PRODUCT. WHERE DIFFERENCES EXIST, THE INSTRUCTIONS IN ANY ES REPORT PERTAINING TO THE APPLICABLE PEX PRODUCT SHALL GOVERN.

## WATER SUPPLY

NOT TO SCALE

APPROVED BY

JUN 22 2007

NTA INC

| | | | | | |
|---|---|---|---|---|---|
| STMS041307-22 | Title: WATER SUPPLY | dti design·tech·inc | Drawn By: . Date: . Revised By: . Date: . | Model No. 1458 | Pg. 20 |

| DESIGNATION | PLUMBING FIXTURE SCHEDULE - UFAS | | | |
|---|---|---|---|---|
| | MANUFACTURER | MODEL NO. | COLOR | GENERAL NOTES |
| | MANSFIELD | #137 | WHITE | TOILET BOWL |
| | MANSFIELD | #160 | WHITE | TOILET TANK |
| | ODYSSEY | OP44218 | WHITE | TOILET SEAT |
| | BANNER | 766755 | SATIN NICKEL | KIT FAUCET |
| | MOEN | 4925BC | SATIN NICKEL | BATH FAUCET |
| | MOEN | T183BC | SATIN NICKEL | SHOWER TRIM KIT |
| | MOEN | 62300 | - | ANTI-SCALD VALVE |
| | AMERICAN STANDARD | 0419.444 | WHITE | CHINA VANITY SINK |
| | DAYTON | GE23321 | SS | KITCHEN SINK |

| DESIGNATION | PLUMBING FIXTURE SCHEDULE | | | |
|---|---|---|---|---|
| | MANUFACTURER | MODEL NO. | COLOR | GENERAL NOTES |
| | MANSFIELD | #130 | WHITE | TOILET BOWL |
| | MANSFIELD | #160 | WHITE | TOILET TANK |
| | ODYSSEY | OP44218 | WHITE | TOILET SEAT |
| | BANNER | 766755 | SATIN NICKEL | KIT FAUCET |
| | MOEN | 4925BC | SATIN NICKEL | BATH FAUCET |
| | MOEN | T183BC | SATIN NICKEL | SHOWER TRIM KIT |
| | MOEN | 62300 | - | ANTI-SCALD VALVE |
| | ODYSSEY | 2006957 | WHITE | CHINA VANITY SINK |
| | ENEX | H3319-7BS4B | SS | KITCHEN SINK |

| DESIGNATION | ACCESSORY FIXTURE SCHEDULE | | | |
|---|---|---|---|---|
| | MANUFACTURER | MODEL NO. | COLOR | GENERAL NOTES |
| | AMERICAN PRIDE | #M24 | WHITE | SURFACE MOUNTED MEDICINE CABINET |
| | ODYSSEY | 14584-SN | BRUSHED N | TOWEL BAR |
| | ODYSSEY | 14586-SN | BRUSHED N | TISSUE HOLDER |

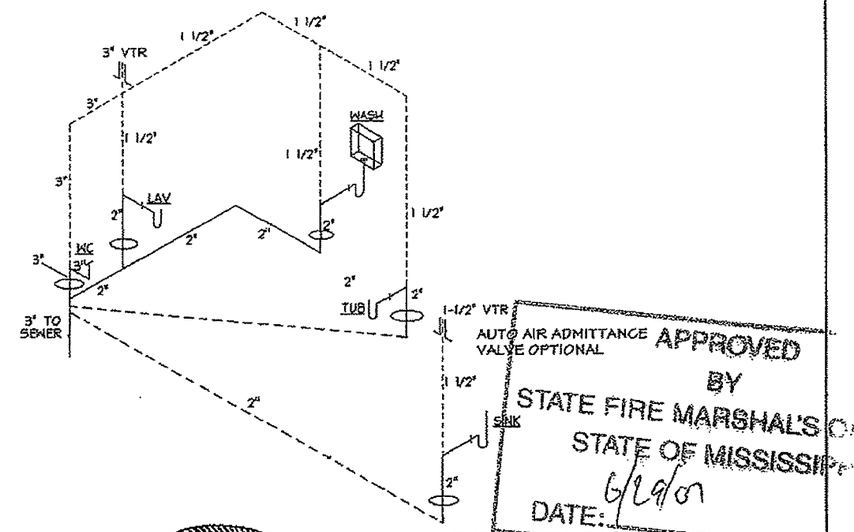


APPROVED BY STATE FIRE MARSHAL'S OFFICE STATE OF MISSISSIPPI DATE: 6/29/07

DWV LEGEND

= DRAIN/WASTE PIPING

= VENT PIPING

= DROPS TO BE FIELD CONNECTED

DRAIN WASTE VENT

NOT TO SCALE

NADER TOMASBI REGISTERED PROFESSIONAL ENGINEER 16679 06/19/2007 STATE OF MISSISSIPPI

APPROVED BY JUN 22 2007

NIA INC

## PLUMBING NOTES:

1. ALL PLUMBING FIXTURES SHALL HAVE SEPARATE SHUT-OFF VALVES.
2. WATER HEATER SHALL HAVE SAFETY PAN WITH 3/4" DRAIN TO EXTERIOR, T & P RELIEF VALVE WITH DRAIN TO EXTERIOR, AND A SHUT OFF VALVE WITHIN 3 FEET ON A COLD WATER SUPPLY LINE.
3. WATER PIPES INSTALLED IN A WALL EXPOSED TO THE EXTERIOR SHALL BE LOCATED ON THE HEATED SIDE OF THE WALL INSULATION. WATER PIPING INSTALLED IN AN UNCONDITIONED ATTIC SHALL BE INSULATED WITH AN INSULATION OF R-6.5 MINIMUM.
4. DWV SYSTEM SHALL BE ABS OR PVC - SCHEDULE 40
5. WATER SUPPLY LINES SHALL BE CPVC OR PEX. PIPE SHALL BE INSTALLED IN ACCORDANCE WITH THE MANUFACTURERS LIMITATIONS AND INSTRUCTIONS.
6. BUILDING DRAIN AND CLEANOUTS ARE DESIGNED AND SITE INSTALLED BY OTHERS, SUBJECT TO LOCAL JURISDICTION APPROVAL.
7. TUB ACCESS PROVIDED UNDER HOME, UNLESS OTHERWISE NOTED.
8. SHOWER STALLS SHALL BE COVERED WITH NON-ABSORBENT MATERIAL TO A HEIGHT OF 72" ABOVE FINISH FLOOR.
9. PROVIDE THERMAL EXPANSION DEVICE IF REQUIRED BY WATER HEATER MANUFACTURER OR SYSTEM INSTALLATION ON SITE BY OTHERS.
10. THE MINIMUM SIZE WATER SERVICE PIPE SHALL BE 3/4".
11. THERMAL EXPANSION TANK REQUIRED AT WATER HEATER.
12. ALL PENETRATIONS IN FLOORS FOR PIPING MUST BE CAULKED OR FOAMED.

| STMS041307-22 | Title: DWV SYSTEM | dti design+tech+inc | Drawn By: . Date: . / Revised By: . Date: . | Model No. 1458 | Pg. 21 |
|---|---|---|---|---|---|

## SYMBOLS

X = CIRCUIT NUMBER

- 15A RECEPT
- CEILING LIGHT
- SINGLE SWITCH
- THERMOSTAT
- AC/DC SMOKE ALARM, ALL TO BE INTERCONNECTED PER MANUFACTURER'S INSTRUCTIONS AND ALL APPLICABLE CODES
- MECHANICAL FAN
- WALL MOUNTED LIGHT
- 3-WAY SWITCH
- SWITCH RUN
- 20A RECEPT
- * GFCI PROTECTED
- DOUBLE SWITCH
- TV JACK
- COMBINATION SMOKE ALARM AND CARBON MONOXIDE ALARM, TO BE INTERCONNECTED PER MANUFACTURER'S INSTRUCTIONS AND ALL APPLICABLE CODES
- J - J-BOX FOR ELECTRICAL CONNECTION
- PHONE JACK
- HVAC UNIT

SCALE BAR

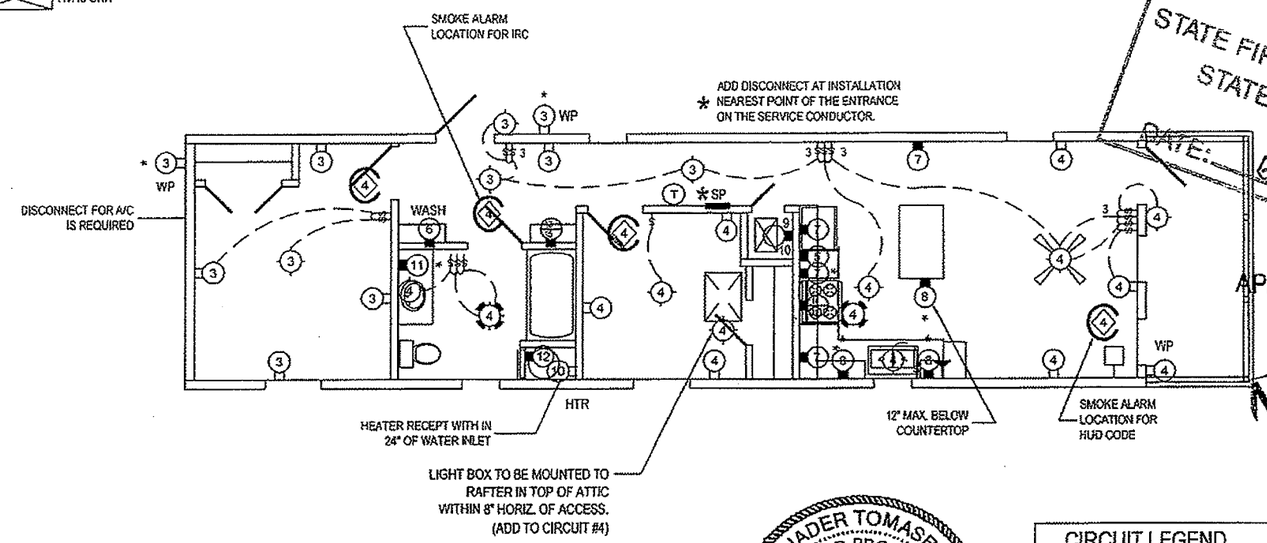


APPROVED BY STATE FIRE MARSHAL'S OFFICE STATE OF MISSISSIPPI DATE: 6/19/07

APPROVED BY JUN 22 2007 NIA INC

NADER TOMASBI REGISTERED PROFESSIONAL ENGINEER 16679 06/19/2007 STATE OF MISSISSIPPI

SERVICE SIZE 125 AMPERE

### CIRCUIT LEGEND

| CIRCUIT No. | DESCRIPTION | WIRE SIZE | BREAKER SIZE |
|---|---|---|---|
| 1 | GENERAL LIGHTING | 14-2 W/GR. | 15A-S. POLE |
| 2 | GENERAL LIGHTING | 14-2 W/GR. | 15A-S. POLE |
| 3 | GENERAL LIGHTING | 14-2 W/GR. | 15A-S. POLE |
| 4 | GENERAL LIGHTING | 14-2 W/GR. | 15A-S. POLE |
| 5 | MICROWAVE | 12-2 W/GR. | 20A-S. POLE |
| 6 | WASHER RECEPT | 12-2 W/GR. | 20A-S. POLE |
| 7 | APPLIANCE CIRCUIT | 12-2 W/GR. | 20A-S. POLE |
| 8 | APPLIANCE CIRCUIT | 12-2 W/GR. | 20A-S. POLE |
| 9 | HVAC SYSTEM INSTALLED PER MANUFACTURERS SPECS OR DESIGNED/INSTALLED BY OTHERS | | |
| 10 | | | |
| 11 | BATH RECEPT CIRCUIT | 12-2 W/GR. | 20A-S. POLE |
| 12 | WATER HEATER | 10-2 W/GR. | 25A-S. POLE |
| 13,15 | ELECTRIC DRYER | 10-3 W/GR. | 30A-D. POLE |
| 14,16 | ELECTRIC RANGE | 8-3 W/GR. | 40A-D. POLE |

NOTE:
ALL HOMES ARE BUILT TO MEET THE 2005 NATIONAL ELECTRICAL CODE

NOTES:

ALL SMOKE ALARMS W/ BATTERY BACK-UP TO BE INTERCONNECTED WITH A 14 GAUGE MIN. INTERCONNECTION WIRE OR EQUIVALENT PER MANUFACTURER'S RECOMMENDATIONS.

ØØØ -BRKR/WIRE SIZES TO BE DETERMINED AND SUPPLIED ON-SITE BY OTHERS.

ALL BRANCH CIRCUITS SUPPLYING 15A AND 20A OUTLETS IN BEDROOMS ARE PROTECTED BY AN ARC-FAULT CIRCUIT INTERRUPTER IN ACCORDANCE WITH SECTION 210.12 OF THE NEC.

22"X30" ATTIC ACCESS REQUIRED WHEN CLEAR HEIGHT OF ATTIC EXCEEDS 30".

| STMS041307-22 | Title: Electrical Plan | dti design•tech•inc | Drawn By: . Date: . Revised By: . Date: . | Model No. 1458 | Pg. 22.A |
|---|---|---|---|---|---|

1458

ELECTRICAL LOAD CALCULATIONS

APPROVED BY STATE FIRE MARSHAL'S OFFICE STATE OF MISSISSIPPI DATE: 6/19/07

**COMPUTE GENERAL PURPOSE LOAD - 2005 NEC**

| | | | | | |
|---|---|---|---|---|---|
| 14 | FT. x | 58 | FT. x 3 W / SQ.FT.= | 2.44 | KVA |
| 2.44 | KVA / | 120 | VOLTS = | 20.33 | AMPS |
| 20.33 | AMPS / | 15 | AMPS = | 1.00 | CIRCUITS |

**MINIMUM NUMBER OF CIRCUITS REQUIRED:**

2 - GENERAL PURPOSE @ 15 AMPS
2 - SMALL APPLIANCE @ 20 AMPS
1 - LAUNDRY @ 20 AMPS

**COMPUTE MINIMUM FEEDER:**

| | | |
|---|---|---|
| GENERAL LIGHTING..... | 2.44 | KVA |
| SMALL APPLIANCE..... | 3 | KVA |
| LAUNDRY..... | 1.5 | KVA |
| RANGE..... | 9.7 | KVA |
| WATER HEATER..... | 4.5 | KVA |
| DRYER..... | 5.3 | KVA |
| FURNACE(GAS/OIL)..... | 1.3 | KVA |
| VENT FANS(4 TL.)..... | 0.3 | KVA |
| MICROWAVE OVEN..... | 1.5 | KVA |
| DISHWASHER..... | 0 | KVA |
| GARBAGE DISPOSAL..... | 0 | KVA |
| TOTAL..... | 29.54 | KVA |

NADER TOMASBI REGISTERED PROFESSIONAL ENGINEER 16679 06/19/2007 STATE OF MISSISSIPPI

10 KVA @ 100% = 10 KVA
29.54 KVA - 10 KVA = 19.54 KVA @ 40% = 7.82 KVA
10 KVA + 7.82 KVA = 17.82 KVA / 240 VOLTS = **74.25 AMPS**
MINIMUM ENTRANCE TO BE: **100** AMPERE SERVICE

**OPT. CENTRAL ELECTRIC SPACE HEATING IN PLACE OF GAS/OIL**

0 KVA ELECTRIC FURNACE @ 65%= 0 KVA
17.30 KVA + 0 KVA = 17.30 KVA / 240 VOLTS= **72.07 AMPS**
MINIMUM ENTRANCE TO BE: **100** AMPERE SERVICE

**OPT. AIR CONDITIONER** 4.2 KVA
17.82 KVA + 4.2 KVA = 22.02 KVA / 240 VOLTS= **91.75 AMPS**
MINIMUM ENTRANCE TO BE: **100** AMPERE SERVICE

**COMPUTE NEUTRAL LOAD 2005 NEC**

GENERAL LIGHTING + SMALL APPLIANCE = 6.94 KVA
FIRST 3.0 KVA @ 100% = 3 KVA
6.94 KVA - 3.0 KVA = 3.94 KVA x 35% = 1.38 KVA
NET TOTAL = 3 KVA + 1.38 KVA = 4.38 KVA

| | | |
|---|---|---|
| RANGE @70%..... | 6.79 | KVA |
| DRYER @70%..... | 3.71 | KVA |
| DISHWASHER..... | 0 | KVA |
| FURNACE..... | 1.3 | KVA |
| MICROWAVE OVEN..... | 1.5 | KVA |
| FANS..... | 0.3 | KVA |
| GARBAGE DISPOSAL..... | 0 | KVA |

TOTAL = 17.98 KVA / 240 VOLTS= **74.91 AMPS**



APPROVED BY

JUN 22 2007

NIA INC

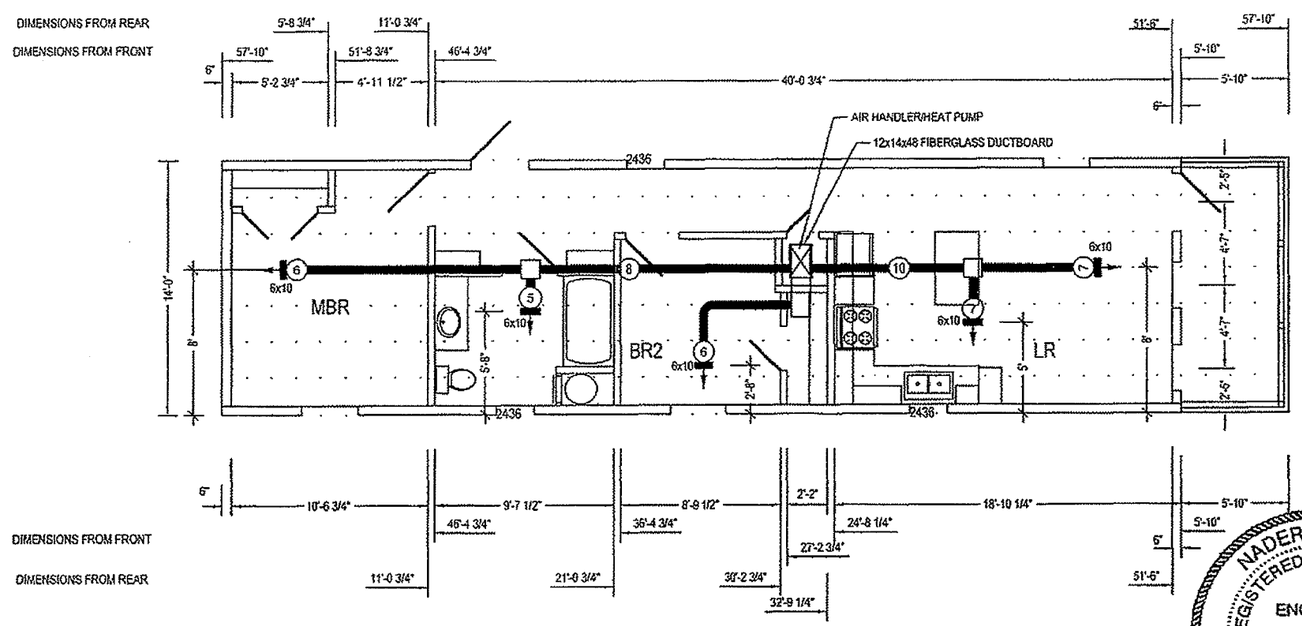


APPROVED BY

JUN 2 2 2007

NIA INC

NADER TOMASBI
REGISTERED PROFESSIONAL
ENGINEER
16679
06/19/2007
STATE OF MISSISSIPPI

APPROVE BY
STATE MARSHAL'S OFFICE
STATE OF MISSISSIPPI
DATE: 6/26/07

MECHANICAL NOTES AND LEGEND

1. AIR SUPPLY DUCTS SHALL BE INSULATED WITH A MINIMUM R-6 * INSULATION.
2. BEDROOM DOORS SHALL BE UNDERCUT 2-1/2"
3. REGISTERS AND GRILLES SHALL COMPLY WITH THE REQUIREMENTS OF UL181-1996 REVISIONS (CLASS 1 OR 2 DUCTS)
4. FURNACE COMPARTMENT DOOR SHALL HAVE A RETURN AIR GRILL SIZED PER FURNACE MAUNUFACTURER REQUIREMENTS.

(6) = FLOW DIRECTION, REGISTER, AND FLEX DUCT DIAMETER.

* OPTIONAL PER 2003 IRC ENERGY CODE. USE R-8 AFTER JAN. 2008 OR WHEN BUILT TO 2006 IRC.

| | | | | | |
|---|---|---|---|---|---|
| STMS041307-22 | Title: HVAC/Exhaust Fan Duct Plan | dti +design+tech+inc+ | Drawn By: . Date: . Revised By: . Date: . | Model No. 1458 | Pg. 23.A |

**Short Form**
***Entire House***
**Healthy Homes of Louisiana, llc**

Job:
Date:
By:

PO Drawer 3127, West Monroe, La 71294 Phone: 318-355-1918 Fax: 318-397-2123 Email: bobby@parksmobileair.com Web: www.ParksMobileAir.com

## Project Information

For: 1B-A

## Design Information

| | Htg | Clg |
|---|---|---|
| Outside db (°F) | 35 | 95 |
| Inside db (°F) | 70 | 75 |
| Design TD (°F) | 35 | 20 |
| Daily range | - | L |
| Inside humidity (%) | - | 50 |
| Moisture difference (gr/lb) | - | 53 |

| Infiltration | |
|---|---|
| Method | Simplified |
| Construction quality | Average |
| Fireplaces | |

NADER TOMASBI REGISTERED PROFESSIONAL ENGINEER 16679 06/19/2007 STATE OF MISSISSIPPI

| HEATING EQUIPMENT | | | COOLING EQUIPMENT | | |
|---|---|---|---|---|---|
| Make | | | Make | | |
| Trade | | | Trade | | |
| Model | | | Cond | | |
| | | | Coil | | |
| Efficiency | 80 AFUE | | Efficiency | 0 EER | |
| Heating input | 0 | Btuh | Sensible cooling | 0 | Btuh |
| Heating output | 0 | Btuh | Latent cooling | 0 | Btuh |
| Temperature rise | 0 | °F | Total cooling | 0 | Btuh |
| Actual air flow | 422 | cfm | Actual air flow | 422 | cfm |
| Air flow factor | 0.049 | cfm/Btuh | Air flow factor | 0.045 | cfm/Btuh |
| Static pressure | 0.30 | in H2O | Static pressure | 0.30 | in H2O |
| Space thermostat | | | Load sensible heat ratio | 0.77 | |

| ROOM NAME | Area (ft²) | Htg load (Btuh) | Clg load (Btuh) | Htg AVF (cfm) | Clg AVF (cfm) |
|---|---|---|---|---|---|
| MST BR | 158 | 2220 | 2413 | 109 | 110 |
| BTH | 106 | 1163 | 779 | 57 | 35 |
| BR2 | 127 | 1584 | 1930 | 78 | 88 |
| KT | 132 | 1381 | 2447 | 68 | 111 |
| LR | 132 | 2260 | 1716 | 111 | 78 |
| HALL | 77 | 0 | 0 | 0 | 0 |
| Entire House | 731 | 8608 | 9285 | 422 | 422 |
| Other equip loads | | 1108 | 633 | | |
| Equip. @ 1.00 RSM | | | 9918 | | |
| Latent cooling | | | 3032 | | |
| TOTALS | 731 | 9715 | 12950 | 422 | 422 |

Printout certified by ACCA to meet all requirements of Manual J 8th Ed.



APPROVED BY
JUN 22 2007
NIA INC

wrightsoft Version 6

# Duct System Summary
## *Entire House*
### Healthy Homes of Louisiana, llc

Job:
Date:
By:

PO Drawer 3127, West Monroe, La 71294 Phone: 318-355-1918 Fax: 318-397-2123 Email: bobby@parksmobileair.com Web: www.ParksMobileAir.com

## Project Information

For: 1B-A

| | Heating | | Cooling | |
|---|---|---|---|---|
| External static pressure | ***0.30*** | in H2O | ***0.30*** | in H2O |
| Pressure losses | 0.00 | in H2O | 0.00 | in H2O |
| Available static pressure | 0.30 | in H2O | 0.30 | in H2O |
| Supply / return available pressure | 0.27 / 0.03 | in H2O | 0.27 / 0.03 | in H2O |
| Lowest friction rate | 0.109 | in/100ft | 0.109 | in/100ft |
| Actual air flow | 422 | cfm | 422 | cfm |
| Total effective length (TEL) | 276 | ft | | |

## Supply Branch Detail Table

| Name | | Design (Btuh) | Htg (cfm) | Clg (cfm) | Design FR | Diam (in) | Rect Size (in) | Duct Matl | Actual Ln (ft) | Ftg.Eqv Ln (ft) | Trunk |
|---|---|---|---|---|---|---|---|---|---|---|---|
| MST BR | c | 2413 | 109 | 110 | 0.165 | 6 | 0x 0 | VIFx | 16.6 | 145.0 | st1 |
| BTH | h | 1163 | 57 | 35 | 0.167 | 5 | 0x 0 | VIFx | 11.2 | 147.7 | st1 |
| BR2 | c | 1930 | 78 | 88 | 0.169 | 6 | 0x 0 | VIFx | 9.0 | 148.5 | st2 |
| KT | c | 2447 | 68 | 111 | 0.110 | 7 | 0x 0 | VIFx | 19.3 | 223.2 | st2 |
| LR | h | 2260 | 111 | 78 | 0.109 | 7 | 0x 0 | VIFx | 24.7 | 220.0 | st2 |

## Supply Trunk Detail Table

| Name | Trunk Type | Htg (cfm) | Clg (cfm) | Design FR | Veloc (fpm) | Diam (in) | Rect Duct Size (in) | Duct Material | Trunk |
|---|---|---|---|---|---|---|---|---|---|
| st1 | Peak AVF | 166 | 145 | 0.165 | 475 | 8 | 0 x 0 | VinlFlx | |
| st2 | Peak AVF | 256 | 277 | 0.109 | 508 | 10 | 0 x 0 | VinlFlx | |

## Return Branch Detail Table

| Name | Grill Size (in) | Htg (cfm) | Clg (cfm) | TEL (ft) | Design FR | Veloc (fpm) | Diam (in) | RectSize (in) | Stud/Joist Opening (in) | Duct Matl | Trunk |
|---|---|---|---|---|---|---|---|---|---|---|---|
| rb1 | 0x 0 | 422 | 422 | 31.2 | 0.109 | 537 | 12 | 0x 0 | | ShMt | |

APPROVED BY

JUN 22 2007

NIA INC

NADER TOMASBI
REGISTERED PROFESSIONAL
ENGINEER
16679
06/19/2007
STATE OF MISSISSIPPI

Permit #

Permit Date

APPROVED BY STATE FIRE MARSHAL'S OFFICE STATE OF MISSISSIPPI DATE: 6/6/07

RES*check* Software Version 3.7.3

# Compliance Certificate

Project Title: 1458
Report Date: 06/10/07

Energy Code: **2003 IECC**
Location: **Columbus, Mississippi**
Construction Type: **Single Family**
Glazing Area Percentage: **8%**
Heating Degree Days: **2908**

Construction Site: Owner/Agent: Designer/Contractor:

Compliance: **Invalid SHGC(s)** Maximum UA: Your Home UA: -->

| Assembly | Gross Area or Perimeter | Cavity R-Value | Cont. R-Value | Glazing or Door U-Factor | UA |
|---|---|---|---|---|---|
| Ceiling 1: Flat Ceiling or Scissor Truss: | 812 | 30.0 | 1.0 | | 28 |
| Sidewall Hallside: Wood Frame, 16" o.c.: | 416 | 19.0 | 1.0 | | 23 |
| Window 1: Vinyl Frame:Double Pane with Low-E: SHGC: 0.00 | 19 | | | 0.390 | 7 |
| Door 1: Solid: | 21 | | | 0.350 | 7 |
| Sidewall Kit. Side: Wood Frame, 16" o.c.: | 416 | 19.0 | 1.0 | | 22 |
| Window 2: Vinyl Frame:Double Pane with Low-E: SHGC: 0.00 | 42 | | | 0.390 | 16 |
| Front Endwall: Wood Frame, 16" o.c.: | 112 | 19.0 | 1.0 | | 4 |
| Window 3: Vinyl Frame:Double Pane with Low-E: SHGC: 0.00 | 25 | | | 0.390 | 10 |
| Door 2: Solid: | 21 | | | 0.350 | 7 |
| Rear Sidewall: Wood Frame, 16" o.c.: | 112 | 19.0 | 1.0 | | 7 |
| Floor 1: All-Wood Joist/Truss:Over Unconditioned Space: | 812 | 11.0 | 1.0 | | 54 |
| Electric: Forced Hot Air: 100 AFUE | | | | | |

NADER TOMASBI REGISTERED PROFESSIONAL ENGINEER 16679 06/19/2007 STATE OF MISSISSIPPI

APPROVED BY

JUN 2 2 2007

NTA INC

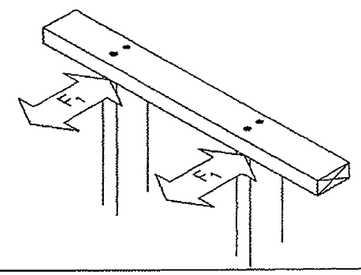


NADER TOMASBI
REGISTERED PROFESSIONAL
ENGINEER
16579
06/19/2007
STATE OF MISSISSIPPI

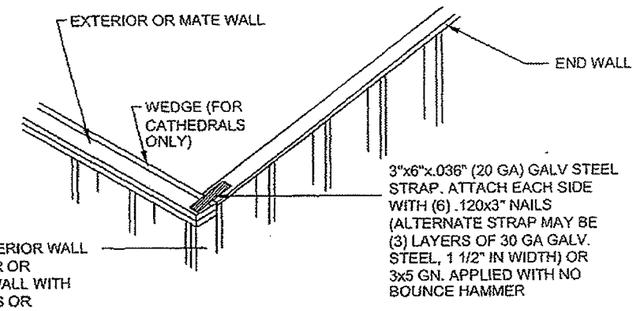


EXTERIOR WALL OR MATE WALL

SCALE: NONE

| CONNECTION | | |
|---|---|---|
| PARAMETERS | FASTENER (MINIMUM LENGTH AND DIAMETER OR STAPLE SIZE) | QUANTITY PER CONNECTION OR SPACING |
| | | 168" FLOOR |
| STUD SPACING = 16" O.C. | 3"x0.131" P.D. NAIL | 3 |
| | 2 1/2"x15 GA. STAPLE | 4 |

APPROVED BY
STATE FIRE MARSHAL'S OFFICE
STATE OF MISSISSIPPI
DATE: 6/19/07

| CONNECTION | | |
|---|---|---|
| PARAMETERS | FASTENER (MINIMUM LENGTH AND DIAMETER OR STAPLE SIZE) | QUANTITY PER CONNECTION OR SPACING |
| | | 168" FLOOR |
| | 3"x0.131" P.D. NAIL | 6" O.C. |
| | 2 1/2"x15 GA. STAPLE | 4" O.C. |

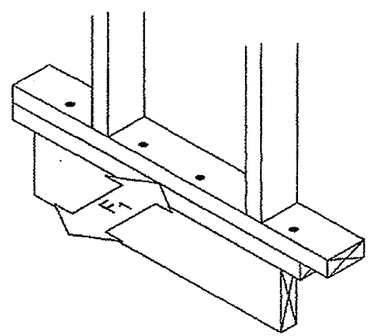


| CONNECTION | | |
|---|---|---|
| PARAMETERS | FASTENER (MINIMUM LENGTH AND DIAMETER OR STAPLE SIZE) | QUANTITY PER CONNECTION OR SPACING |
| | | 168" FLOOR |
| STUD SPACING = 16" O.C. | #8x3" SCREW | 3 PER BAY |
| | 3"x0.131" P.D. NAIL | 3 PER BAY |
| | 2 1/2"x15 GA. STAPLE | 4 PER BAY |

| CONNECTION | PARAMETERS | | QUANTITY PER CONNECTION OR SPACING |
|---|---|---|---|
| CORNER STUDS SIDEWALL/END WALL INTERSECTION 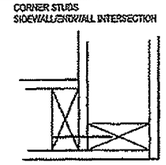 | ALL LOCATIONS | 3"x0.131" P.D. NAIL | 16" O.C. |
| | | 2 1/2"x15 GA. STAPLE | 10" O.C. |
| | | | SEE SHEARWALL DETAILS |
| DOUBLE STUDS OR JACK TO JAMB STUDS 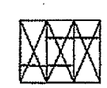 | ALL LOCATIONS | 3"x0.131" P.D. NAIL | 8" O.C. |
| | | 2 1/2"x15 GA. STAPLE | 5" O.C. |

APPROVED BY
JUN 22 2007
NTA INC

| STMS041307-22 | Title: Connection Details | dti design•tech•inc | Drawn By: . Date: . Revised By: . Date: . | Model No. 1458 | Pg. 24.A |
|---|---|---|---|---|---|

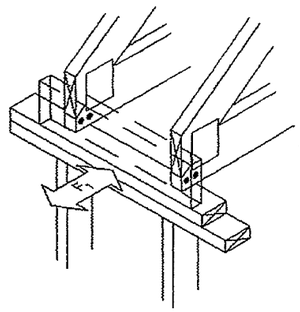


NADER TOMASBI
REGISTERED PROFESSIONAL
ENGINEER
16679
06/19/2007
STATE OF MISSISSIPPI

| ALTERNATE CONNECTION | | |
|---|---|---|
| PARAMETERS | FASTENER (MINIMUM LENGTH AND DIAMETER OR STAPLE SIZE) | QUANTITY PER CONNECTION OR SPACING |
| | | 168" FLOOR |
| TRUSS SPACING = 16" O.C. | #10x4" SCREW | 1 EACH SIDE OF TRUSS TO TOP PLATE |
| | #10x4" SCREW | FROM RAIL TO TOP PLATE, EVERY 8" |

| CONNECTION | | |
|---|---|---|
| PARAMETERS | FASTENER (MINIMUM LENGTH AND DIAMETER OR STAPLE SIZE) | QUANTITY PER CONNECTION OR SPACING |
| | | 168" FLOOR |
| TRUSS SPACING = 16" O.C. | 3"x0.131" P.D. NAIL | 3 |
| | #10x4" SCREW | 2 AT INTERIOR & 3 WITHIN 3' OF CORNERS |

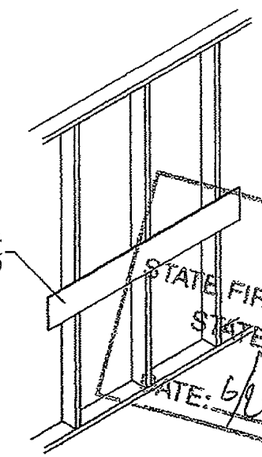


APPROVED BY
STATE FIRE MARSHAL'S OFFICE
STATE OF MISSISSIPPI
DATE: 6/29/07

BELTRAIL DETAIL

OPTIONAL: BELTRAIL MAY BE 1X3 WITH DADO IN STUDS

APPROVED BY
JUN 22 2007
NIA INC.

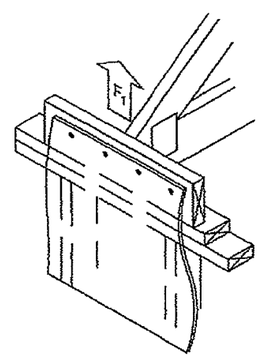


| CONNECTION | | |
|---|---|---|
| PARAMETERS | FASTENER (MINIMUM LENGTH AND DIAMETER OR STAPLE SIZE) | QUANTITY PER CONNECTION OR SPACING |
| | | 168" FLOOR |
| SHEATHING TYPE: 15/32" APA RATED PLYWOOD OR OSB | 3"x0.131" P.D. NAIL | 2" O.C. |
| | 1 1/2"x15 GA. STAPLE | 2" O.C. |
| | 1 1/2"x16 GA. STAPLE | 2" O.C. |

| | | | | | |
|---|---|---|---|---|---|
| STMS041307-22 | Title: Connection Details | dti design·tech·inc | Drawn By: . Date: . / Revised By: . Date: . | Model No. 1458 | Pg. 24.B |

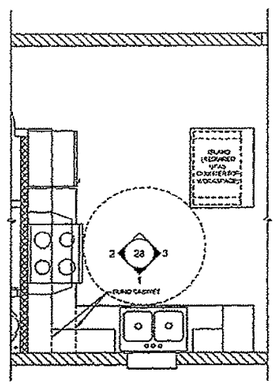

PLAN
KITCHEN

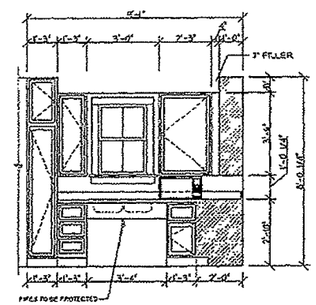

ELEVATION
KITCHEN

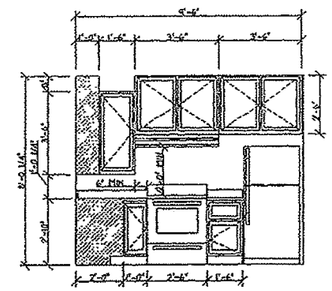

ELEVATION
KITCHEN

NADER TOMASBI
REGISTERED PROFESSIONAL
ENGINEER
16679
06/19/2007
STATE OF MISSISSIPPI

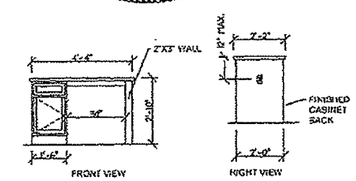


OPTIONAL ISLAND

ELEVATION
KITCHEN

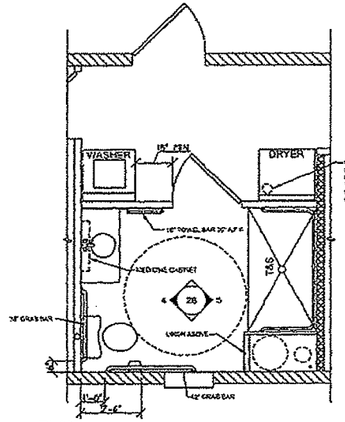


PLAN
BATH

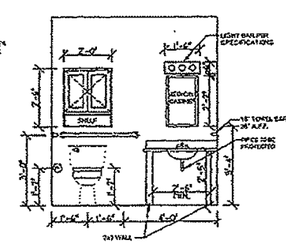

ELEVATION
BATH

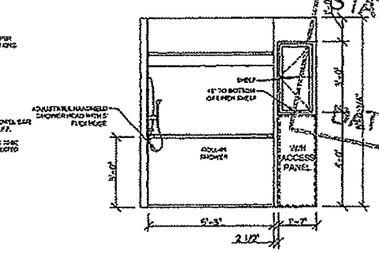

ELEVATION
BATH

APPROVED
BY
STATE FIRE MARSHAL'S OFFICE
STATE OF MISSISSIPPI
DATE: 6/29/07

APPROVED BY
JUN 22 2007

NTA INC.

| | | | | | |
|---|---|---|---|---|---|
| STMS041307-22 | Title: CABINET DETAILS | dti • design • tech • inc | Drawn By: . Date: . / Revised By: . Date: . | Model No. 1458 | Pg. 25 |

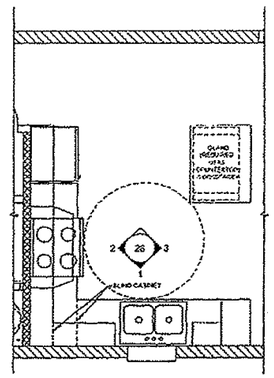

PLAN
KITCHEN

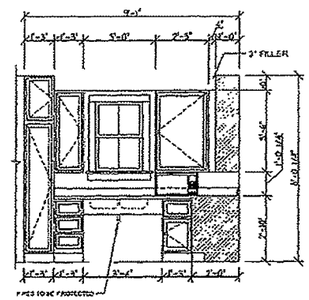

ELEVATION
KITCHEN

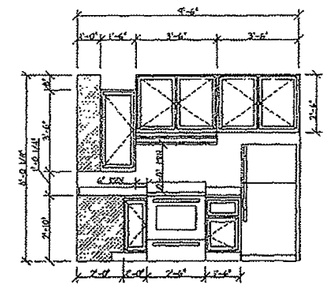

ELEVATION
KITCHEN

NADER TOMASBI
REGISTERED PROFESSIONAL
ENGINEER
16679
06/19/2007
STATE OF MISSISSIPPI

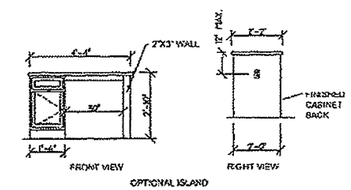


ELEVATION
KITCHEN

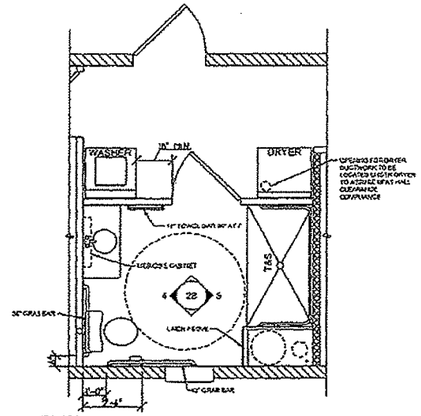

PLAN
BATH

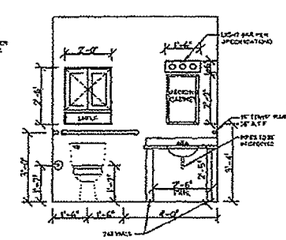

ELEVATION
BATH

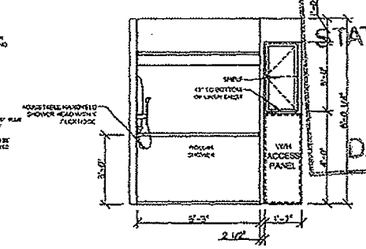

ELEVATION
BATH

APPROVED
BY
STATE FIRE MARSHAL'S OFFICE
STATE OF MISSISSIPPI
DATE: 6/29/07

APPROVED BY
JUN 29 2007
NTA INC.

| | | | | | |
|---|---|---|---|---|---|
| STMS041307-22 | Title: CABINET DETAILS - UFAS | dti • design • tech • inc • | Drawn By: . Date: . / Revised By: . Date: . | Model No. 1458 | Pg. 26 |