STATE OF MISSISSIPPI

GEORGE DALE
Commissioner of Insurance
State Fire Marshal

LEE HARRELL
Deputy Commissioner of Insurance

RICKY DAVIS
State Chief Deputy Fire Marshal

LARRY BARR
State Fire Coordinator

DEPARTMENT OF INSURANCE
OFFICE OF THE FIRE MARSHAL
501 N. WEST STREET • 1001 WOOLFOLK BUILDING
JACKSON, MISSISSIPPI 39201
firemarshal@mid.state.ms.us
Website: www.doi.state.ms.us

Post Office Box 79 (39205)
Jackson, Mississippi
State Fire Marshal's Office
(601) 359-1061
1-888-648-0877
Fax: (601) 359-1076
State Fire Coordinator
(601) 359-1062

September 6, 2007

Mr. David J. Barts
Account Manager
NTA, Inc.
Post Office Box 490
Nappannee, IN 46550

(X) **Plan Review** ( ) **Quality Manual** (X) **New** ( ) **Revisions**

RE: Cavalier Homes
Model# Cottage 1C09-B1014

Dear Mr. Barts:

Eugene Humphrey, Assistant Chief Deputy State Fire Marshal, has requested that I contact you concerning the above referenced project dated September 6, 2007.

The State Fire Marshal's Office evaluation of the plan using the codes checked below found said plan **in** compliance and is therefore **approved** as submitted to this office.

(X) International Residential Code Ed. 2003
( ) International Building Code Ed. _____
(X) National Electrical Code Ed, 2005
( ) NFPA Standard _____
(X) Other ASCE 7-2002

If you should have any questions or concerns, please do not hesitate to contact our office.

Sincerely,

James Johns, II, Deputy State Fire Marshal, I

Cc: Ricky Davis, Chief, Deputy State Fire Marshal

JJ/sh

R:/SHARE/MACKEY06/PLANREVIEW06/DAVIDJBARTS.NTA.CAVALIERHOMESOFALABAMA.MODELCOTTAGE1C09B1014.0907.DOC

RECEIVED
SEP 06 2007
STATE MISS. INSURANCE DEPT.
FIRE MARSHAL'S OFFICE

State of Mississippi

Mississippi Emergency Management Agency

Mississippi Cottage

APPROVED
BY
STATE FIRE MARSHAL'S OFFICE
STATE OF MISSISSIPPI
DATE: 8/6/07

APPROVED BY
SEP - 5 2007
NTA INC

Cottage 1C - Elevation A
Model Plan - 09-B1014
Alternative Housing Pilot Program

CHRIS D. WALDREP
REGISTERED PROFESSIONAL
ENGINEER
16328
STATE OF MISSISSIPPI
7/16/07
P.E. STAMP

CAVALIER
HOME
BUILDERS

REVISIONS:	SCALE: NTS = 1'-0"	APPROVED BY:	STATE OF MISSISSIPPI	TITLE: COVER SHEET	MODEL NO: 09-B1014
	DATE: 7/16/07	DRAWN BY:	MISSISSIPPI EMERGENCY MANAGEMENT AGENCY	HOUSE SIZE: 16 x 70 — 3BR 1BATH	DRAWING NO: 1 of 51

STATE OF MISSISSIPPI

STRUCTURAL PACKAGE INDEX:

1 of 51 COVER SHEET
2 of 51 INDEX SHEET
3 of 51 WORKING FLOOR PLAN
4 of 51 ELEVATIONS
5 of 51 CARPET/TILE PRINT
6 of 51 FRAME
7 of 51 FRAME DETAILS
8 of 51 FLOOR CONSTRUCTION (16" O.C.)
9 of 51 FLOOR DECKING LAYOUT (4'x8')
10 of 51 FLOOR DECKING PENETRATIONS
11 of 51 WIRE SCHEMATIC
12 of 51 INSIDE PANEL LAYOUT– LOWER
13 of 51 INSIDE PANEL LAYOUT-UPPER
14 of 51 MISC. INFORMATION
15 of 51 CABINET DETAILS
16 of 51 OHD w/UPFLOW FURN. LAYOUT
17 of 51 OHD & CEILING REFERENCE
18 of 51 CEILING CONSTRUCTION (16"O.C.)
19 of 51 PORCH ROOF FRAMING DETAILS
20 of 51 WALL SECTION-SIDEWALL & ENDWALL
21 of 51 ALTERNATE A - WALL SECTION - PORCH
22 of 51 ALTERNATE A - PORCH FRAMING DETAILS
23 of 51 CRAWL SPACE FOUNDATION PLAN (30 PSF)
24 of 51 CRAWL SPACE FOUNDATION DETAILS (30 PSF)
25 of 51 TEMPORARY FOUNDATION REQUIREMENTS
26 of 51 TEMPORARY FOUNDATION REQUIREMENT DETAILS
27 of 51 TEMPORARY FOUNDATION TIE DOWN STRAPPING
28 of 51 METAL ROOF DETAILS
29 of 51 WINDOW DETAILS
30 of 51 CEILING SHEETROCK / OSB LAYOUT
31 of 51 EXTERIOR DETAILS
32 of 51 DOOR DETAILS
33 of 51 GENERAL INTERIOR SPECS.
34 of 51 GENERAL INTERIOR SPECS.
35 of 51 DRAIN WASTE VENT SCHEMATIC
36 of 51 WATER SUPPLY LINE SCHEMATIC
37 of 51 WALL FRAMING NOTES
38 of 51 WALL FRAMING DETAILS
39 of 51 ENDWALL DETAILS – SW1
40 of 51 ENDWALL DETAILS – SW13
41 of 51 INTERIOR SHEARWALL – SW6
42 of 51 INTERIOR SHEARWALL – SW12
43 of 51 P-WALL DETAILS
44 of 51 P-WALL DETAILS
45 of 51 P-WALL DETAILS
46 of 51 P-WALL DETAILS
47 of 51 FRONT SIDEWALL FRAMING
48 of 51 FRONT SIDEWALL SHEATHING
49 of 51 REAR SIDEWALL FRAMING
50 of 51 REAR SIDEWALL SHEATHING
51 of 51 WIND BORNE DEBRIS PROTECTION DETAIL

STRUCTURAL LOAD LIMITATIONS:

CODE:
INTERNATIONAL RESIDENTIAL CODE 2003
NATIONAL ELECTRICAL CODE 2005
MISSISSIPPI MODULAR APPROVAL
MANUFACTURED HOME CONSTRUCTION AND SAFETY STANDARDS
24 CFR PART 3280 (WIND ZONE 3 STANDARDS)
UNIFORM FEDERAL ACCESSIBILITY STANDARDS
(UFAS-1984) 49 FR 31528
FLOOR LIVE LOAD:
40 PSF
FLOOR DEAD LOAD:
10 PSF
ROOF LIVE LOAD:
30 PSF
TCDL = 7 PSF
BCDL = 7 PSF
BCLL = 10 PSF

WIND LOAD:
A. 150 MPH.....WINDSPEED (3 SECOND GUST)
ASCE-7 2002

ALL CONSTRUCTION TO COMPLY WITH WIND ZONE 3 REQUIREMENTS OF 24 CFR 3280.

B. Iw = 1.....WIND IMPORTANCE FACTOR.
C. B.....WIND EXPOSURE CATEGORY.
D. GCpi = +/- 0.18.....INTERNAL PRESSURE COEFFICIENT.
E1. Pw = 65.8 PSF.....WALL COMPONENT & CLADDING LOAD.
E2. Pw = 53.3 PSF.....(INTERIOR ZONE) WALL COMPONENT AND CLADDING LOAD.
F1. Pr = 49.1 PSF.....(INTERIOR ZONE) ROOF COMPONENT AND CLADDING LOAD.
F2. Pr = 82.4 PSF.....(END ZONE) ROOF COMPONENT AND CLADDING LOAD.
F3. Pr = 124.0 PSF.....(CORNER ZONE) ROOF COMPONENT AND CLADDING LOAD.
G1. OVERHANG =.....78.2 PSF (SIDE ZONE)
G2. OVERHANG =.....124.0 PSF (CORNER ZONE)
H. THIS BUILDING IS NOT DESIGNED FOR PLACEMENT ON THE UPPER HALF OF A HILL OR ESCARPMENT EXCEEDING 15 FEET IN HEIGHT.
WALL HEIGHT: 8'-0 ½"

NOTES:

1) ALL UNITS MUST BEAR THE STATE OF MISSISSIPPI MODULAR LABEL AND THE HUD MANUFACTURERS CONSTRUCTION AND SAFETY STANDARD 24 CFR PART 3280 LABEL FOR THE DESIGN CONDITIONS SPECIFIED.
2) THE MISSISSIPPI LABEL / DATA PLATE SHALL BE LOCATED AT THE DISTRIBUTION PANEL OR KITCHEN CABINET.
3) HUD LABEL ON EXTERIOR ONE FOOT OVER, ONE FOOT ABOVE FLOOR FROM REAR ROADSIDE OF UNIT.
4) A TYPICAL INSTALLATION DRAWING CERTIFIED BY A REGISTERED ENGINEER IN THE STATE OF MISSISSIPPI SHALL BE PROVIDED FOR A TEMPORARY SET (ON-FRAME) AND PERMANENT SET (OFF-FRAME) TO MEET ALL OF THE DESIGN CONDITIONS SPECIFIED.
5) FLOOD LOAD:
THIS BUILDING SHALL NOT BE INSTALLED IN ANY FLOOD HAZARD AREA UNLESS SET ON A FOUNDATION DESIGNED IN ACCORDANCE WITH ASCE/SEI 25. THE FOUNDATION SHALL BE DESIGNED BY A REGISTERED ENGINEER. THIS FOUNDATION SHALL BE DESIGNED AND CONSTRUCTED TO RESIST ALL LOADS THAT MAY BE EXERTED ON THE STRUCTURE: NO LOADS APPLIED TO THE FOUNDATION SHALL BE TRANSFERRED TO THE HOME.
6) WHEN A DISCREPANCY EXISTS BETWEEN THE WRITTEN SPECIFICATIONS AND DRAWINGS, THE WRITTEN SPECIFICATIONS GOVERN.
7) THE MANUFACTURERS MUST VERIFY THAT ALL UFAS REQUIREMENTS ARE MET WHEN BIDDING.
8) MAUFACTURER'S INSTALLATION INSTRUCTIONS SHALL BE AVAILABLE ON THE JOB SITE AT THE TIME OF INSPECTION.
9) THIS HOME SHALL NOT BE INSTALLED CLOSER THAN 18" FROM THE BOTTOM OF THE FLOOR JOISTS TO THE GROUND.

APPROVED BY
SEP - 5 2007
NTA INC

ANY SPECIFICATIONS AND DETAILS LISTED IN THESE PRINTS MAY BE OVERWRITTEN BY THE STATE OF MISSISSIPPI, ENGINEER OF RECORD, OR THE MANUFACTURER. ANY CHANGES OR SUBSTITUTIONS SHALL BE NOTED IN THE "MS" SECTION OF THE MANUFACTURER'S DAPIA SECTION.

APPROVED
BY
STATE FIRE MARSHAL'S OFFICE
STATE OF MISSISSIPPI
DATE: 9/6/07

168" UNIT WIDTH: 150MPH (3 SECOND GUST EXPOSURE B)

CAVALIER HOMES BUILDERS -- WINFIELD DIVISION (MS LIC. #15005446)

CHRIS D. WALDREP
REGISTERED PROFESSION
ENGINEER
16328
STATE OF MISSISSIPPI
7/16/07
P.E. STAMP

CAVALIER
HOME
BUILDERS

REVISIONS:	SCALE: NTS = 1'-0"	APPROVED BY:	STATE OF MISSISSIPPI	TITLE: INDEX SHEET	MODEL NO: 09-B1014
—	DATE: 7/16/07	DRAWN BY:	MISSISSIPPI EMERGENCY MANAGEMENT AGENCY	HOUSE SIZE: 16 x 70 — 3BR 1BATH	DRAWING NO. 2 of 51

APPROVED
BY
STATE FIRE MARSHAL'S OFFICE
STATE OF MISSISSIPPI
DATE: 8/6/07

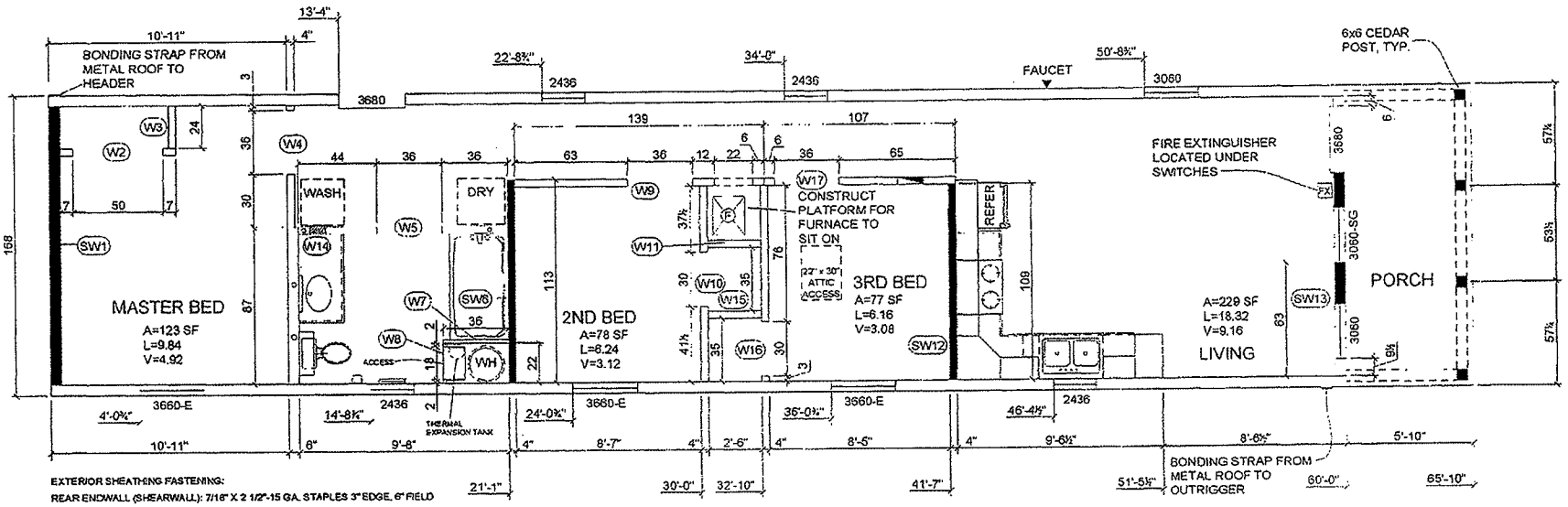

EXTERIOR SHEATHING FASTENING:

REAR ENDWALL (SHEARWALL): 7/16" X 2 1/2"-15 GA. STAPLES 3" EDGE, 6" FIELD

FRONT ENDWALL (SHEARWALL): .131 X 3" NAILS 3" EDGE, 6" FIELD

SIDEWALLS: 7/16" X 1 1/2"-15 GA. STAPLES 6" EDGE, 6" FIELD
7/16" X 2 1/2"-15 GA. STAPLES 3" EDGE, 6" FIELD WITHIN 48" OF CORNER.

SHEATHING TO FLOOR RIM RAIL 3" O.C., SHEATHING TO ROOF EDGE RAIL 3" O.C.

ROOF DECKING: 7/16" X 1 1/2"-15 GA. STAPLES 3" EDGE, 3" FIELD.

WIND ZONE 3 SHEAR WALLS			48" min. ROOF DECKING DIAPHRAGM			
NO	LENGTH	SPLIT (A + B)	PLF	MAT'L / NO. OF SIDES		LAGS
SW1	156"		280	7/16" APA SHEATHING	2	—
SW5	114"		785	7/16" APA SHEATHING	1	(1) PER 16" BEAM
SW12	110"		737	7/16" APA SHEATHING	1	(1) PER 16" BEAM
SW13	42"	19" + 23"	619	7/16" APA SHEATHING	2	(1) PER 16" BEAM

■ SHEAR WALLS FOR ALL WIND ZONES

NOTES:
1) WTR. HTR. - 30 GAL. ELECTRIC
2) HUD DATAPLATE AND MODULAR LABELS ARE TO BE LOCATED IN MASTER BED. CLOSET

APPROVED BY
SEP - 5 2007
NTA INC.

CHRIS D. WALDREP
REGISTERED PROFESSIONAL
ENGINEER
16328
STATE OF MISSISSIPPI
8/16/07
P.E. STAMP

CAVALIER HOME BUILDERS

REVISIONS	SCALE	APPROVED BY:	STATE OF MISSISSIPPI	TITLE	MODEL NO
—	3/16" = 1'-0"	—		WORKING FLOOR PLAN	09-B1014
	DATE 8/16/07	DRAWN BY —	MISSISSIPPI EMERGENCY MANAGEMENT AGENCY	HOUSE SIZE 16 x 70 — 3BR 1BATH	DRAWING NO 3 of 51

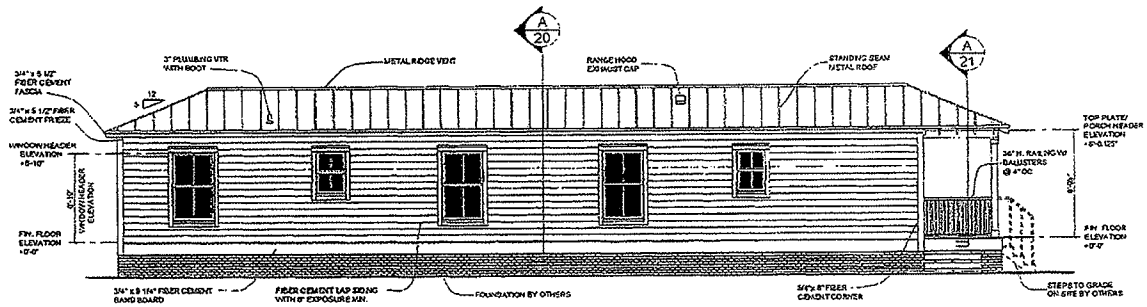

LEFT ELEVATION

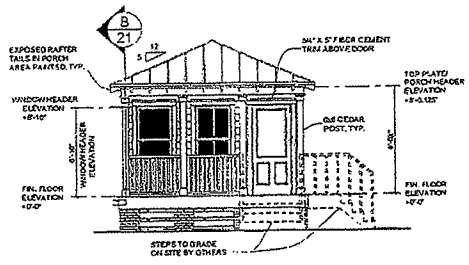

FRONT ELEVATION

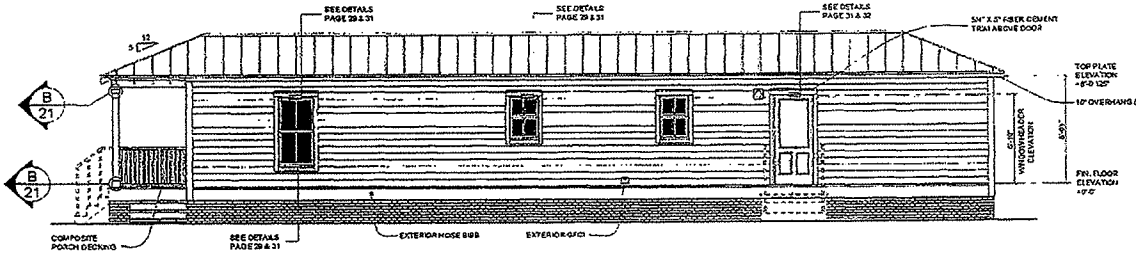

RIGHT ELEVATION

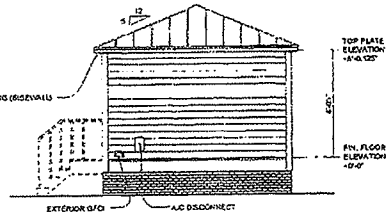

REAR ELEVATION

APPROVED
BY
STATE FIRE MARSHAL'S OFFICE
STATE OF MISSISSIPPI
DATE: 8/16/07

APPROVED BY
SEP - 5 2007
NTA INC

CHRIS D. WALDREP
REGISTERED PROFESSIONAL ENGINEER
16328
STATE OF MISSISSIPPI
8/16/07
P.E. STAMP

CAVALIER HOME BUILDERS

REVISIONS:	SCALE: NTS = 1'-0"	APPROVED BY:	STATE OF MISSISSIPPI	TITLE: ELEVATIONS	MODEL NO: 09-B1014
---	DATE: 8/16/07	DRAWN BY: ---	MISSISSIPPI EMERGENCY MANAGEMENT AGENCY	HOUSE SIZE: 16 x 70 --- 3BR 1BATH	DRAWING NO: 4 of 51

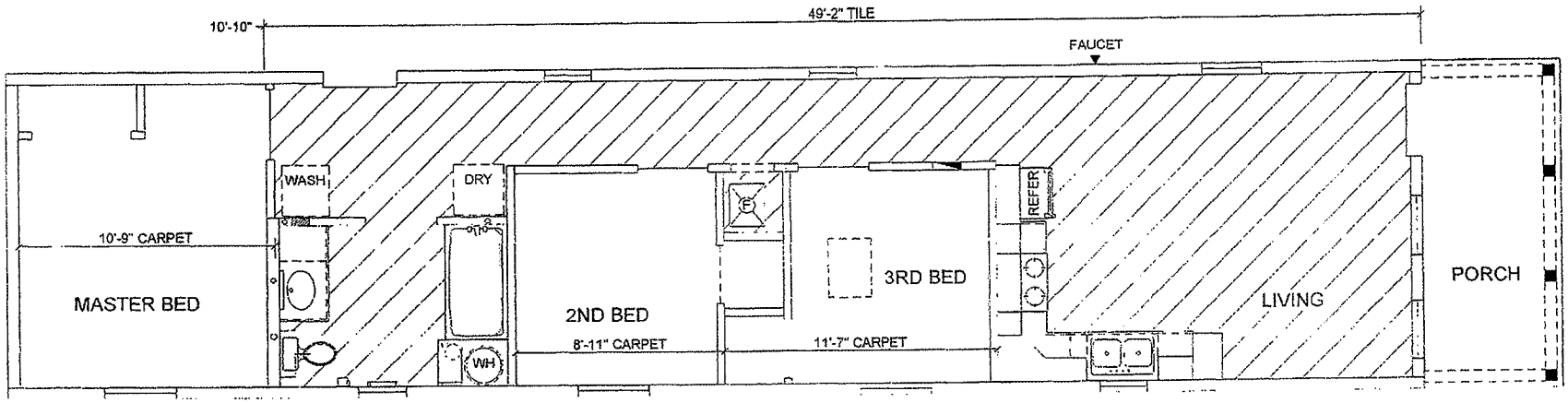

APPROVED
BY
STATE FIRE MARSHAL'S OFFICE
STATE OF MISSISSIPPI
DATE: 9/6/07

CARPET CUTS		
ROOM	SIZE	
	LENGTH	WIDTH
M. BEDROOM	10'-9"	13'-7"
2ND BEDROOM	8'-11"	9'-6"
3RD BEDROOM	11'-7"	9'-6"
TOTAL LENGTH =	31'-3"	

APPROVED BY
SEP - 5 2007
NTA INC

CHRIS D. WALDREP
REGISTERED PROFESSIONAL ENGINEER
16328
STATE OF MISSISSIPPI
7/16/07
P.E. STAMP

CAVALIER
HOME
BUILDERS

REVISIONS	SCALE	APPROVED BY		TITLE	MODEL NO
----	3/16" = 1'-0"	----	**STATE OF MISSISSIPPI**	CARPET / TILE PRINT	09-B1014
	DATE 7/16/07	DRAWN BY ----	MISSISSIPPI EMERGENCY MANAGEMENT AGENCY	HOUSE SIZE 16 x 70 --- 3BR 1BATH	DRAWING NO 5 of 51

APPROVED
BY
STATE FIRE MARSHAL
STATE OF MISSISSIPPI
DATE: 8/1/07

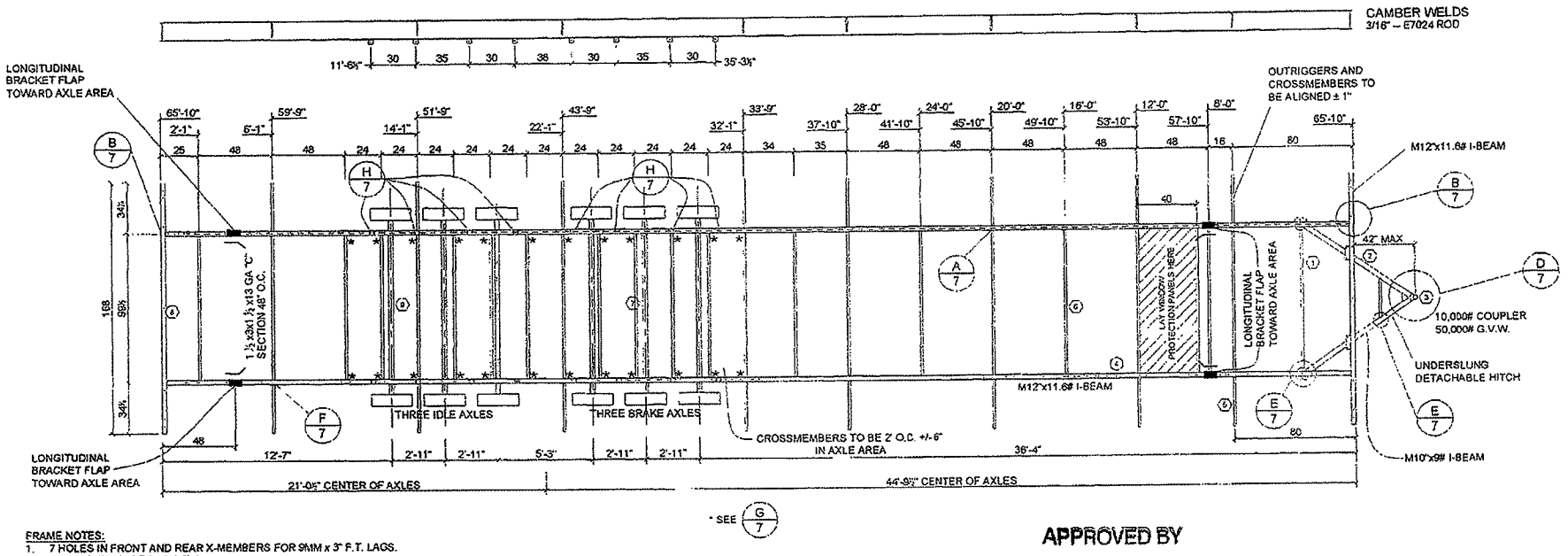

FRAME NOTES:
1. 7 HOLES IN FRONT AND REAR X-MEMBERS FOR 9MM x 3" F.T. LAGS.
   - 2 WITHIN 12" OF EACH END.
   - 1 LOCATED OUTSIDE EACH I-BEAM.
   - 1 LOCATED AT MID-POINT.
2. FRAME COMPLETELY COATED WITH WATER PROOF PAINT AFTER ALL WELDING IS COMPLETE.
3. WELD ALL METAL TO METAL CONTACT WITH 1/8" FILLET OR AS OTHERWISE NOTED.
4. FLOOR LAGGED TO FRAME WITH FRAME CLIP, 9MM x 3" F.T. LAGS.
5. RESERVED.
6. TIRE, AXLES, BRAKES AND BRAKE WIRING TO MEET ALL FEDERAL STANDARDS.
7. TIRES SHALL BE NEW 8 x 14.5 10 PLY "E".
8. FIVE NEW AXLES (TRIPLE EQUALIZED PLUS TANDEM EQUALIZED SPREAD); (3) WITH BRAKES.
9. RIMS, BOLTS, NUTS, OR OTHER RELATED TIRE-MOUNTING HARDWARE MUST BE NEW.
10. UNDERSLUNG DETACHABLE HITCH REMOVED AND STORED UNDER PORCH AFTER SET UP.
11. SERIAL NUMBER MUST BE STAMPED ON THE FRONT CROSSMEMBER IN 3/8" HIGH LETTERS.
12. CAMBER TO BE ADDED TO MAIN I-BEAM PER INDUSTRY STANDARDS.
13. 9MM x 3" LAGS TO HAVE A MINIMUM BENDING YIELD STRESS, F = 190,000 PSI.
14. RESERVED.

LEGEND
1) 168" FRONT HEADER (M12" x 11.6# I-BEAM)
2) DRAWBAR (M10" x 9# I-BEAM)
3) VENTURE JACK (11,000# CAPACITY)
4) I-BEAM MAIN RAILS (M12" x 11.6# I-BEAM)
5) TYPICAL OUTRIGGER (9 1/2" x 34")
6) CROSSMEMBER C-TYPE (1 1/2" x 3" x 1 1/2" x 13 GA)
7) BREAK AXLE GROUP (UNDER SLUNG)
8) 168" REAR HEADER (M12" x 11.6# I-BEAM)
9) IDLER AXLE GROUP (OPT. UNDER SLUNG)

APPROVED BY
SEP - 5 2007
NTA INC

CHRIS D. WALDREP
REGISTERED PROFESSIONAL ENGINEER
16328
STATE OF MISSISSIPPI
7/16/07
P.E. STAMP

CAVALIER HOME BUILDERS

REVISIONS:	SCALE:	APPROVED BY:		TITLE:	MODEL NO:
----	3/16" = 1'-0"	------	**STATE OF MISSISSIPPI**	FRAME	09-B1014
	DATE: 7/16/07	DRAWN BY: ----	MISSISSIPPI EMERGENCY MANAGEMENT AGENCY	HOUSE SIZE: 16 x 70 ---- 3BR 1BATH	DRAWING NO: 6 of 51

APPROVED
BY
STATE FIRE MARSHAL'S OFFICE
STATE OF MISSISSIPPI
DATE: 8/6/07

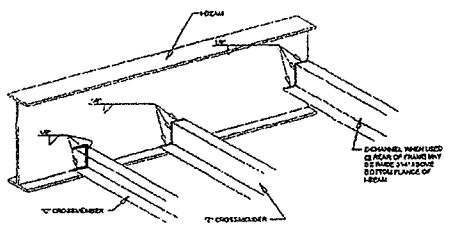

A/7 CROSSMEMBER TO I-BEAM

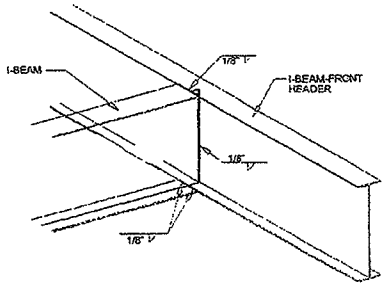

B/7 I-BEAM TO I-BEAM

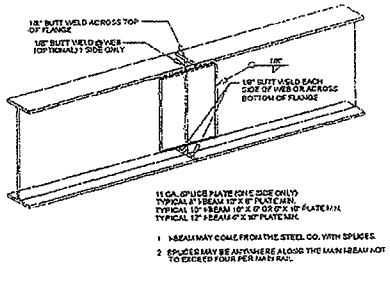

C/7 SPLICE PLATE

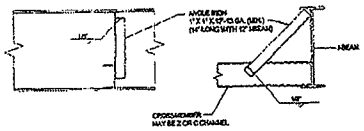

G/7 X-MEMBER GUSSET DETAIL

APPROVED BY
SEP - 5 2007
NTA INC

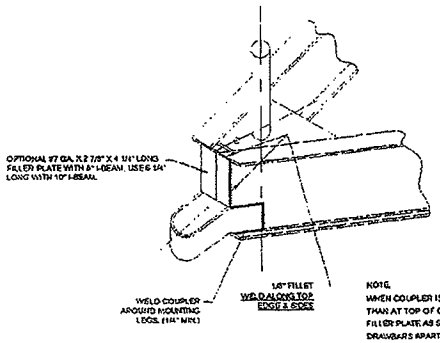

D/7 FILLER PLATE

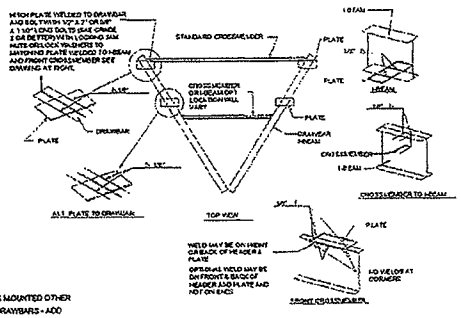

E/7 WELD DETAIL

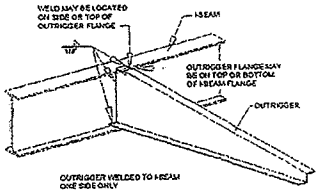

F/7 OUTRIGGER TO I-BEAM

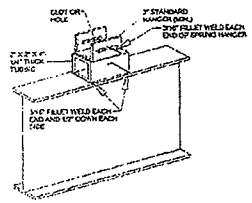

H/7 SPRING HANGER DETAIL
(OPT. WITH UNDERSLUNG AXLES)

CHRIS D. WALDREP
REGISTERED PROFESSIONAL ENGINEER
16328
STATE OF MISSISSIPPI
7/16/07
P.E. STAMP

CAVALIER HOME BUILDERS

REVISIONS	SCALE	APPROVED BY	STATE OF MISSISSIPPI	TITLE	MODEL NO.
---	NTS = 1'-0"	-----		FRAME DETAILS	09-B1014
	DATE 7/16/07	DRAWN BY -----	MISSISSIPPI EMERGENCY MANAGEMENT AGENCY	HOUSE SIZE 16 x 70 --- 3BR 1BATH	DRAWING NO. 7 of 51

APPROVED
BY
STATE FIRE MARSHAL'S OFFICE
STATE OF MISSISSIPPI
DATE: 8/16/07

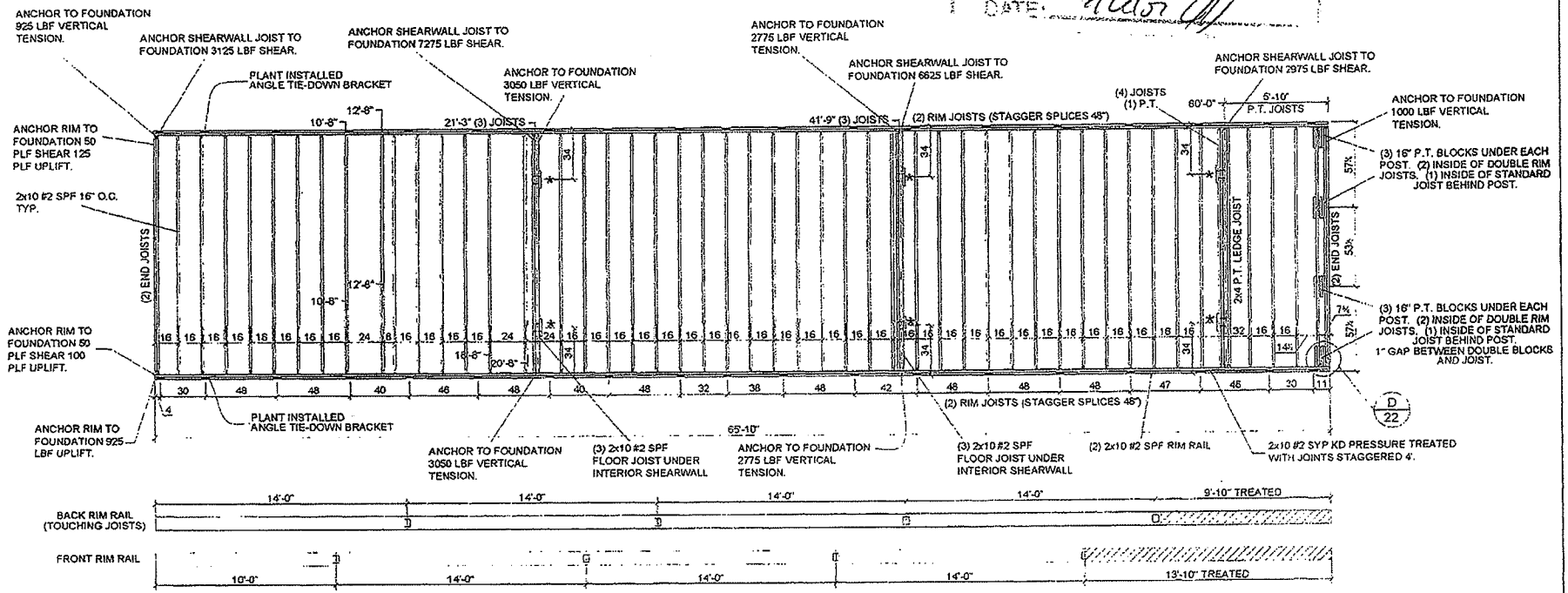

FRAMING NOTES

1. PERIMETER RAIL TO TRANSVERSE JOIST (8) .131x3" P.D. NAILS.
2. RESERVED.
3. DOUBLE PERIMETER RAIL .131x3" P.D. NAILS 2 ROWS 12" O.C. STAGGERED.
4. GANGNAILS ARE OPTIONAL
5. ADHESIVE REQUIRED ON T&G AND PERIMETER RAILS.
6. COMPOSITE DECK BOARDS TO BE INSTALLED PER MANUFACTURER'S INSTRUCTIONS.
7. BOTTOM BOARD (MFG.: SHEPARD MOBILE FLEX OR EQUAL) FASTENED WITH 1"x3/4"x16 GA STAPLES 4" O.C.
8. ALL FASTENERS AND CONNECTOR PLATES INTO TREATED LUMBER MUST BE STAINLESS STEEL OR GALVANIZED STEEL APPROVED FOR TREATED LUMBER.
9. BOTTOM BOARD AND INSULATION NOT INSTALLED IN PORCH AREA.
10. MULTIPLE JOIST FASTENED TOGETHER WITH (2) ROWS OF .131"x3" P.D. NAILS, OR 7/16"x2 1/2"x15 GA. STAPLES 6" O.C. WITH 60% ADHESIVE.
11. NOTCHES IN JOIST TO BE PER IRC R502.8 (MODULAR) OR APPROVED DAPIA DESIGN (HUD)
12. JOIST SPACING +/- 2"

* LAG WITH CLIP I-BEAMS TO SHEARWALL JOISTS (7 MIN. PER I-BEAM)
12" BLOCK SAME SIZE AND SPECIE AS FLOOR JOIST FASTENED WITH 90% GLUE AND (4) 7/16" X 2 1/2"-16 GA. STAPLES

APPROVED BY
SEP - 5 2007
NTA INC

CHRIS D. WALDREP
REGISTERED PROFESSIONAL
ENGINEER
16328
STATE OF MISSISSIPPI
7/16/07
P.E. STAMP

CAVALIER HOME BUILDERS

REVISIONS	SCALE:	APPROVED BY:	STATE OF MISSISSIPPI	TITLE	MODEL NO.
----	3/16" = 1'-0"	------	MISSISSIPPI EMERGENCY MANAGEMENT AGENCY	ALT. A - FLOOR CONSTRUCTION (16" O.C.)	09-B1014
	DATE: 7/16/07	DRAWN BY: ----		HOUSE SIZE: 16 x 70 --- 3BR 1BATH	DRAWING NO: 8 of 51

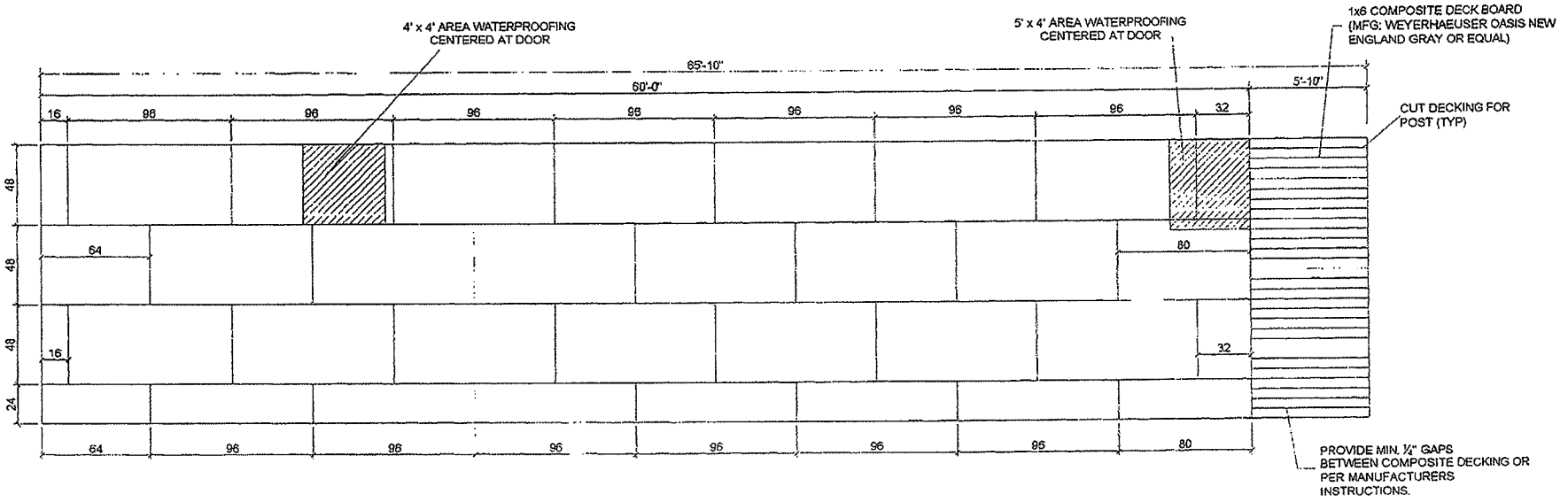

APPROVED
BY
STATE FIRE MARSHALS OFFICE
STATE OF MISSISSIPPI
DATE: 9/6/07

APPROVED BY
SEP - 5 2007
NTA INC

CHRIS D. WALDREP
REGISTERED PROFESSIONAL ENGINEER
16328
STATE OF MISSISSIPPI
7/16/07
P.E. STAMP

CAVALIER HOME BUILDERS

REVISIONS:	SCALE:	APPROVED BY:		
—	3/16" = 1'-0"	—	**STATE OF MISSISSIPPI**	TITLE: FLOOR DECKING LAYOUT (4' x 8')	MODEL NO: 09-B1014
	DATE: 7/16/07	DRAWN BY: —	MISSISSIPPI EMERGENCY MANAGEMENT AGENCY	HOUSE SIZE: 16 x 70 — 3BR 1BATH	DRAWING NO: 9 of 51

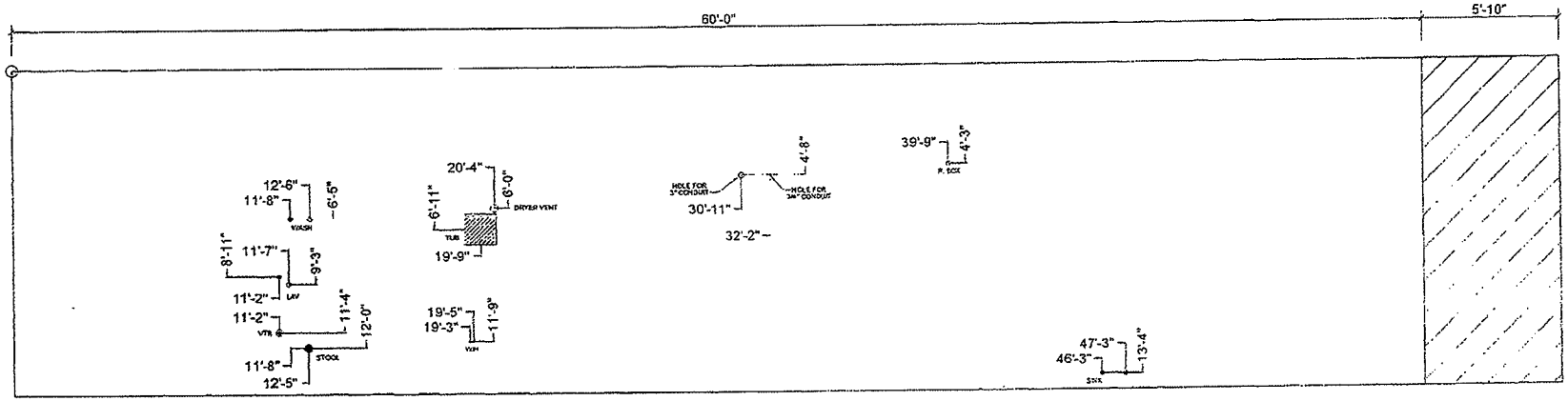

SYMBOLS LEGEND

- HEAT REGISTER
- P-TRAP (10" x 10" UNLESS NOTED OTHERWISE)
- DRAIN PLUMBING HOLE
- WATER PLUMBING HOLE
- STOOL DRAIN PLUMBING HOLE
- WTR. HTR. HOLES
- SMALL WATER PLUMBING HOLE
- 14 1/2" X 14 1/2" FURNACE CUT-OUT
- 6" HOLE (FIREPLACE INTAKE)
- DRYER VENT HOLE

APPROVED
BY
STATE FIRE MARSHAL'S OFFICE
STATE OF MISSISSIPPI
DATE: 9/11/07

APPROVED BY
SEP - 5 2007
NTA INC

CHRIS D. WALDREP
REGISTERED PROFESSIONAL
ENGINEER
16328
STATE OF MISSISSIPPI
8/16/07
P.E. STAMP

CAVALIER
HOME
BUILDERS

REVISIONS:	SCALE:	APPROVED BY:	STATE OF MISSISSIPPI	TITLE:	MODEL NO:
---	3/16" = 1'-0"	---	MISSISSIPPI EMERGENCY MANAGEMENT AGENCY	FLOOR DECKING PENETRATIONS	09-B1014
	DATE: 8/16/07	DRAWN BY: ---		HOUSE SIZE: 16 x 70 — 3BR 1BATH	DRAWING NO: 10 of 51

APPROVED
BY
STATE FIRE MARSHAL'S OFFICE
STATE OF MISSISSIPPI
DATE: 9/6/07

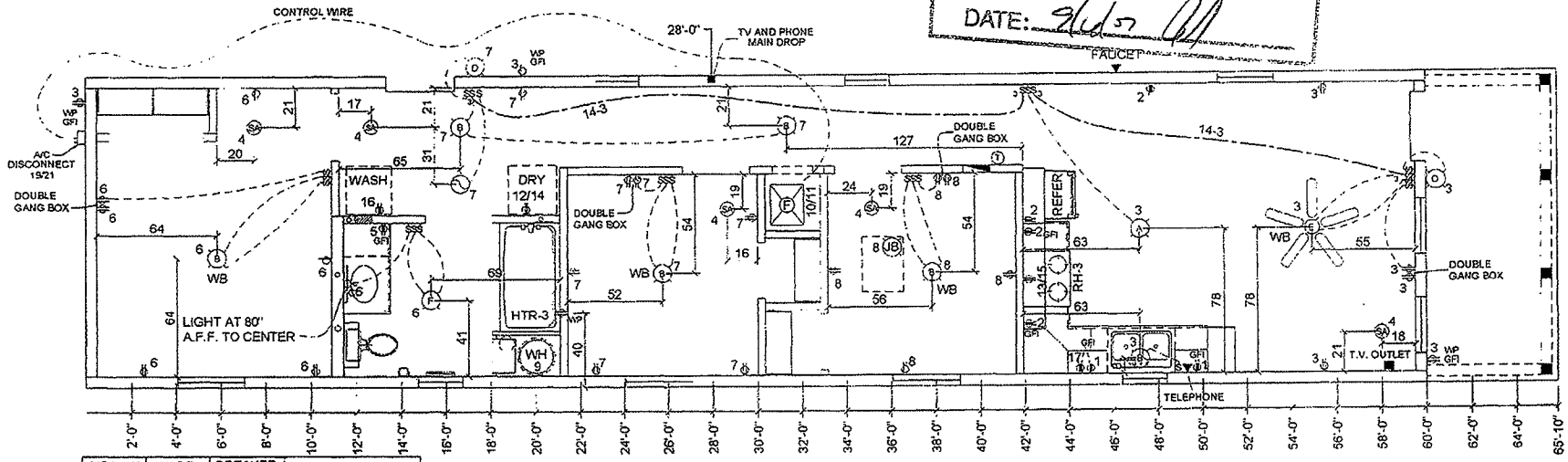

CIRCUIT NUMBER	WIRE SIZE	BREAKER TRIP	BREAKER POLE	ROOM
1 GFCI	12-2	20	1	KITCHEN
2 GFCI	12-2	20	1	KITCHEN/DINING
3	14-2	15	1	LIVING
4 AFCI	14-2	15	1	SMOKE DETECTOR
5 GFCI	12-2	20	1	BATHROOM
6 AFCI	14-2	15	1	BEDROOM 1
7 AFCI	14-2	15	1	BEDROOM 2
8 AFCI	14-2	15	1	BEDROOM 3
9	10-2	25	1	WATER HEATER
10 / 11	6-3	60	2	HVAC
12 / 14	10-3	30	2	DRYER
13 / 15	8-3	40	2	RANGE
16	12-2	20	1	WASHER
17	12-2	20	1	MICROWAVE
18	-	-	-	-
19 / 21	10-2	25	2	A/C DISCONNECT

(SA) SMOKE ALARM INTER-CONNECTED

(JB) JUNCTION BOX

LIGHT FIXTURE LEGEND	
A	9" 2-BULB BRUSHED NICKEL
B	6" 1-BULB BRUSHED NICKEL
C	2-ARM VANITY LIGHT BRUSHED NICKEL
D	WHITE JELLY JAR
E	42" BRUSHED NICKEL / WHITE CEILING FAN
F	EXHAUST FAN w/LIGHT - WHITE 50 CFM

(X) WIRES TO / FROM CROSSOVER
(P) WIRES TO / FROM PANEL BOX

- - - - WIRES IN CEILING (SWITCH LEG)
—— WIRES IN CEILING (3-WAYS)

NOTES:
1) RESERVED.
2) SINCE CRAWLSPACE IS NOT USED FOR STORAGE, NO LIGHT OR JUNCTION BOX IS REQUIRED.

APPROVED BY
SEP - 5 2007
NTA INC

CHRIS D. WALDREP
REGISTERED PROFESSIONAL ENGINEER
16328
STATE OF MISSISSIPPI
8/16/07
P.E. STAMP

CAVALIER HOME BUILDERS

REVISIONS:	SCALE:	APPROVED BY:		TITLE	MODEL NO
----	3/16" = 1'-0"	----	**STATE OF MISSISSIPPI**	WIRE SCHEMATIC	09-B1014
	DATE: 8/16/07	DRAWN BY: ----	MISSISSIPPI EMERGENCY MANAGEMENT AGENCY	HOUSE SIZE: 16 x 70 — 3BR 1BATH	DRAWING NO: 11 of 51

APPROVED
BY
STATE FIRE MARSHAL'S OFFICE
STATE OF MISSISSIPPI
DATE: 9/6/07

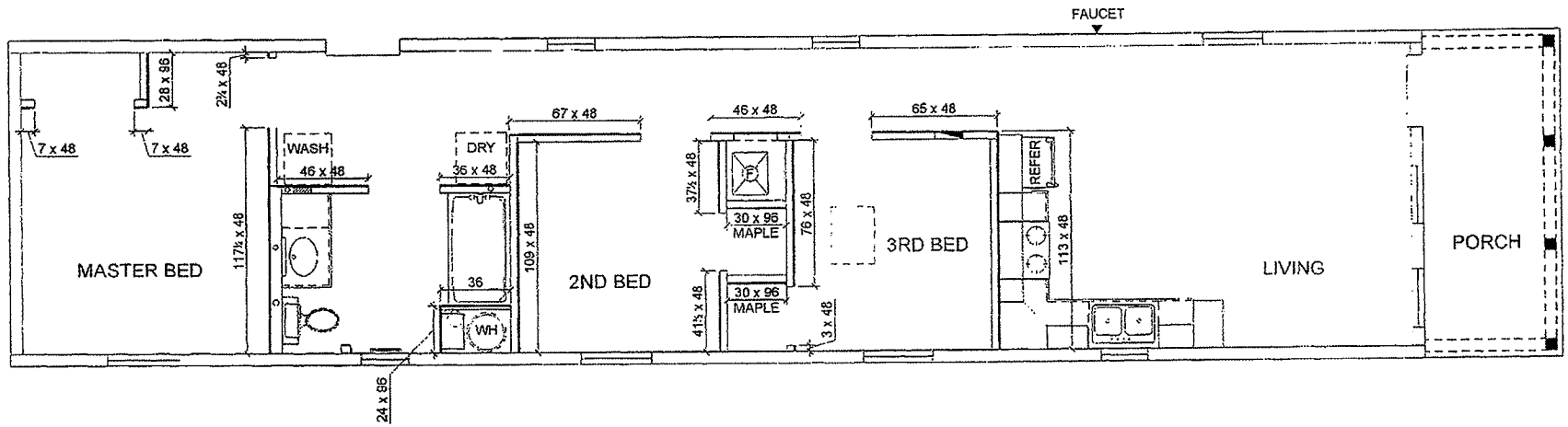

LOWER PANELS

APPROVED BY

SEP - 5 2007

NTA INC

CHRIS D. WALDREP
REGISTERED PROFESSIONAL
ENGINEER
16328
STATE OF MISSISSIPPI

7/16/07

P.E. STAMP

CAVALIER
HOME
BUILDERS

REVISIONS:	SCALE: 3/16" = 1'-0"	APPROVED BY:	STATE OF MISSISSIPPI	TITLE: INSIDE PANEL LAYOUT – LOWER	MODEL NO: 09-B1014
---	DATE: 7/16/07	DRAWN BY: ---	MISSISSIPPI EMERGENCY MANAGEMENT AGENCY	HOUSE SIZE: 16 x 70 ---- 3BR 1BATH	DRAWING NO: 12 of 51

APPROVED
BY
STATE FIRE MARSHAL'S OFFICE
STATE OF MISSISSIPPI
DATE: 5/4/07

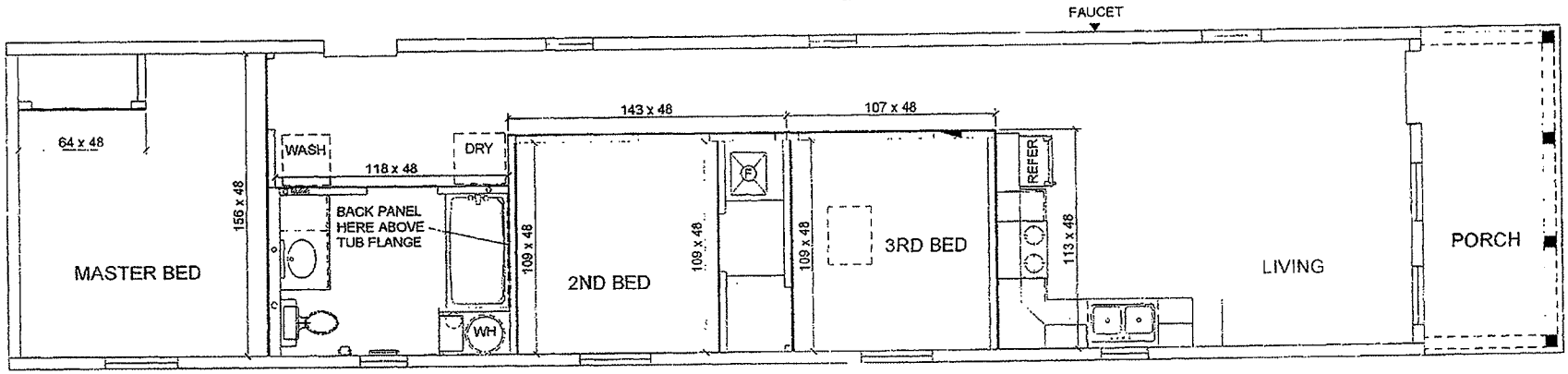

UPPER PANELS

APPROVED BY
SEP - 5 2007
NTA INC

CHRIS D. WALDREP
REGISTERED PROFESSIONAL
ENGINEER
16328
STATE OF MISSISSIPPI
7/16/07
P.E. STAMP

CAVALIER
HOME
BUILDERS

REVISIONS:	SCALE: 3/16" = 1'-0"	APPROVED BY:	STATE OF MISSISSIPPI	TITLE: INSIDE PANEL LAYOUT -- UPPER	MODEL NO: 09-B1014
—	DATE 7/16/07	DRAWN BY —	MISSISSIPPI EMERGENCY MANAGEMENT AGENCY	HOUSE SIZE 16 x 70 --- 3BR 1BATH	DRAWING NO. 13 of 51

APPROVED
BY
STATE FIRE MARSHAL'S OFFICE
STATE OF MISSISSIPPI
DATE: 9/6/07

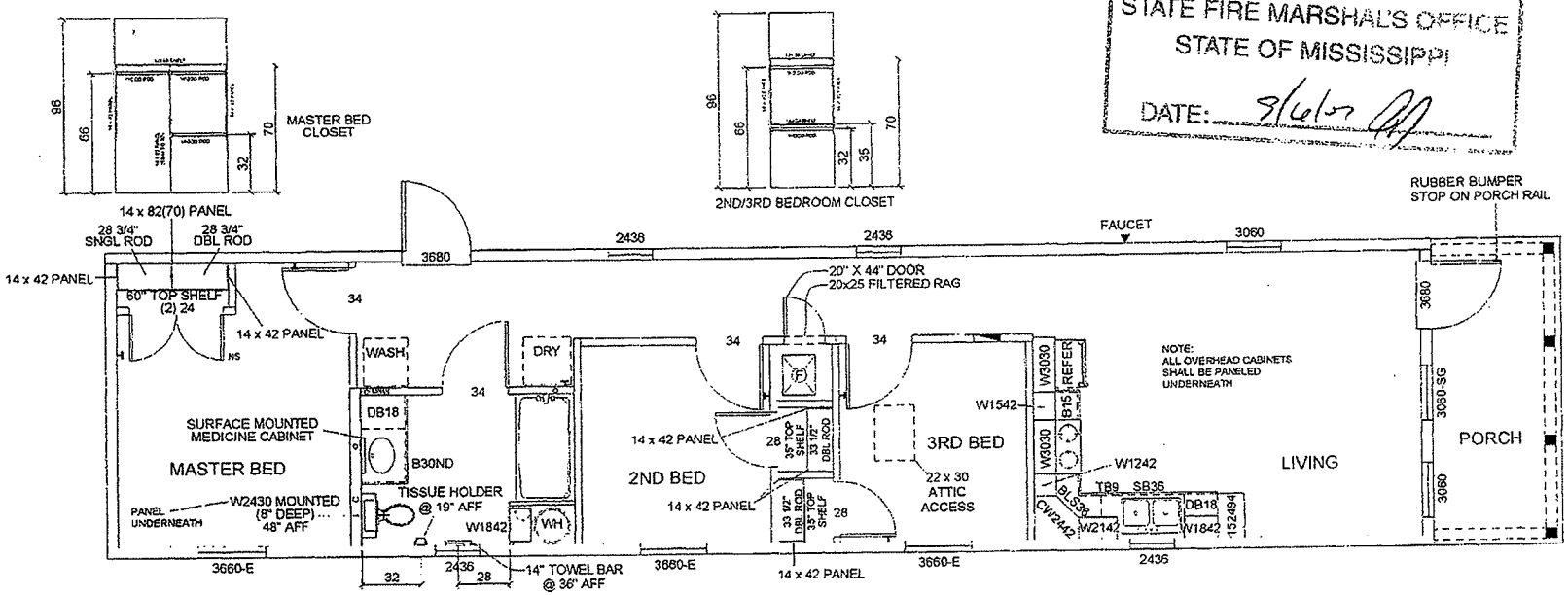

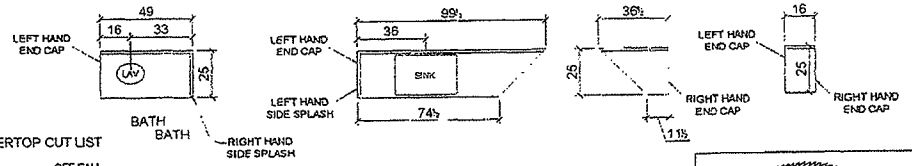

COUNTERTOP CUT LIST

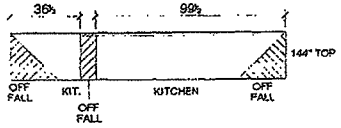

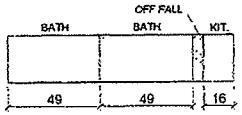

LEGEND:
- FLOOR MOUNTED DOOR STOP
- WALL MOUNTED DOOR STOP
- NS NO DOOR STOP

APPROVED BY
SEP - 5 2007
NTA INC

CHRIS D. WALDREP
REGISTERED PROFESSIONAL
ENGINEER
16328
STATE OF MISSISSIPPI
7/16/07
P.E. STAMP

CAVALIER HOME BUILDERS

REVISIONS:	SCALE: 3/16" = 1'-0"	APPROVED BY:	STATE OF MISSISSIPPI	TITLE: MISC. INFORMATION	MODEL NO. 09-B1014
---	DATE: 7/16/07	DRAWN BY: ---	MISSISSIPPI EMERGENCY MANAGEMENT AGENCY	HOUSE SIZE: 16 x 70 — 3BR 1BATH	DRAWING NO. 14 of 51

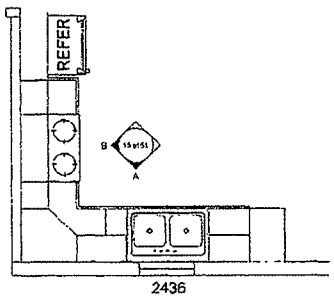

PLAN
KITCHEN

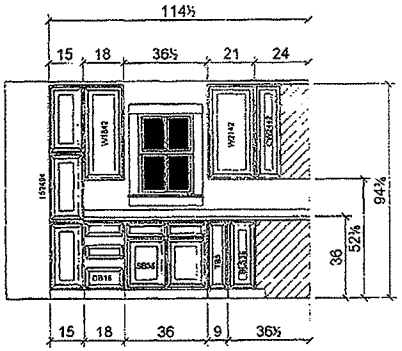

A / 15 ELEVATION
KITCHEN

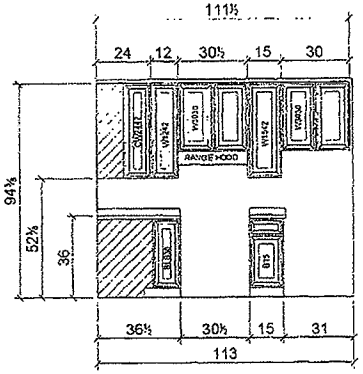

B / 15 ELEVATION
KITCHEN

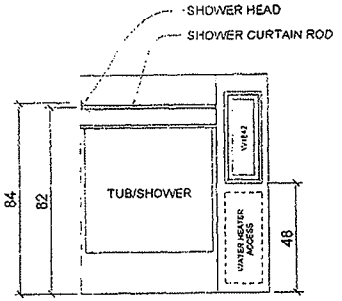

C / 15 ELEVATION
BATH

NOTE:
ALL OVERHEAD CABINETS
SHALL BE PANELED
UNDERNEATH

APPROVED
BY
STATE FIRE MARSHAL'S OFFICE
STATE OF MISSISSIPPI
DATE: 9/6/07

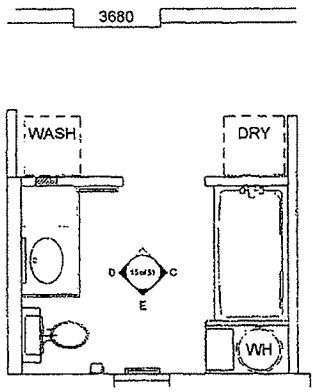

PLAN
BATH

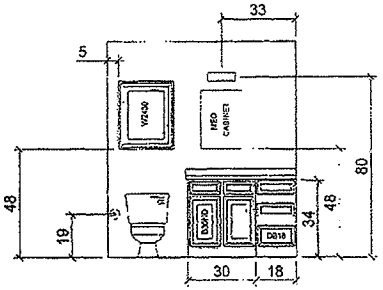

D / 15 ELEVATION
BATH

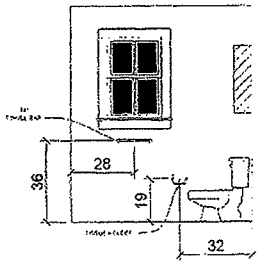

E / 15 ELEVATION
KITCHEN

APPROVED BY
SEP - 5 2007
NTA INC

CHRIS D. WALDREP
REGISTERED PROFESSIONAL
ENGINEER
16328
STATE OF MISSISSIPPI
7/16/07
P.E. STAMP

CAVALIER
HOME
BUILDERS

REVISIONS: ----	SCALE: 1/4" = 1'-0"	APPROVED BY: ----	**STATE OF MISSISSIPPI**	TITLE: CABINET DETAILS	MODEL NO: 09-B1014
	DATE: 7/16/07	DRAWN BY: ----	MISSISSIPPI EMERGENCY MANAGEMENT AGENCY	HOUSE SIZE: 16 x 70 --- 3BR 1BATH	DRAWING NO: 15 of 51

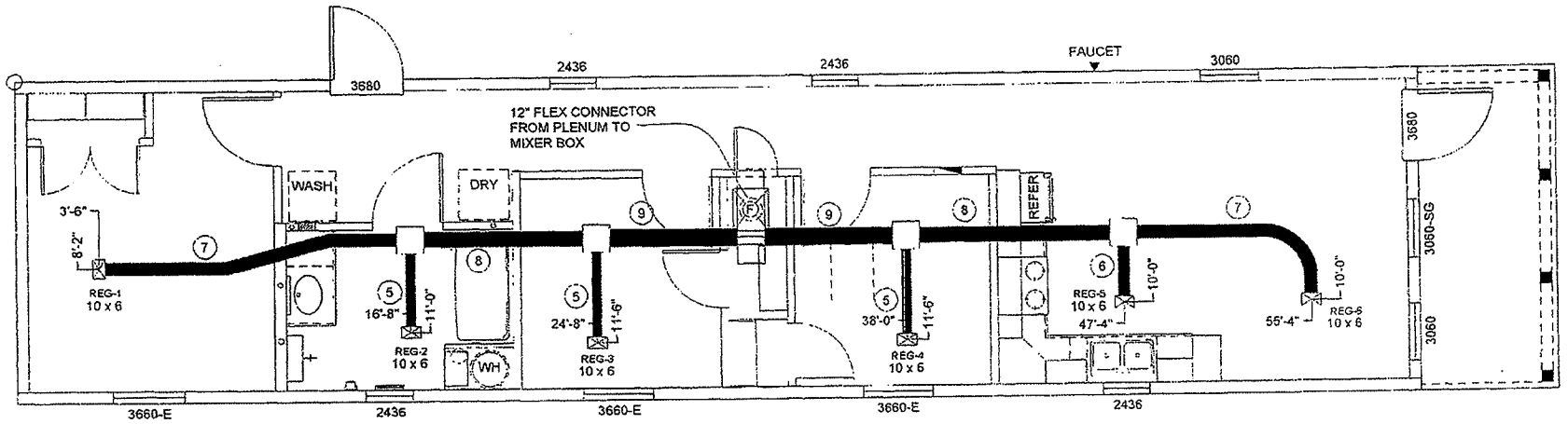

APPROVED
BY
STATE FIRE MARSHAL'S OFFICE
STATE OF MISSISSIPPI
DATE: 9/6/07

APPROVED BY

SEP - 5 2007

NTA INC

CHRIS D. WALDREP
REGISTERED PROFESSIONAL
ENGINEER
16328
STATE OF MISSISSIPPI

8/16/07

P.E. STAMP

CAVALIER
HOME
BUILDERS

REVISIONS	SCALE	APPROVED BY:	STATE OF MISSISSIPPI	TITLE	MODEL NO
—	3/16" = 1'-0"	—	MISSISSIPPI EMERGENCY MANAGEMENT AGENCY	OHD w/UPFLOW FURN. LAYOUT	09-B1014
	DATE 8/16/07	DRAWN BY —		HOUSE SIZE 16 x 70 — 3BR 1BATH	DRAWING NO 16 of 51

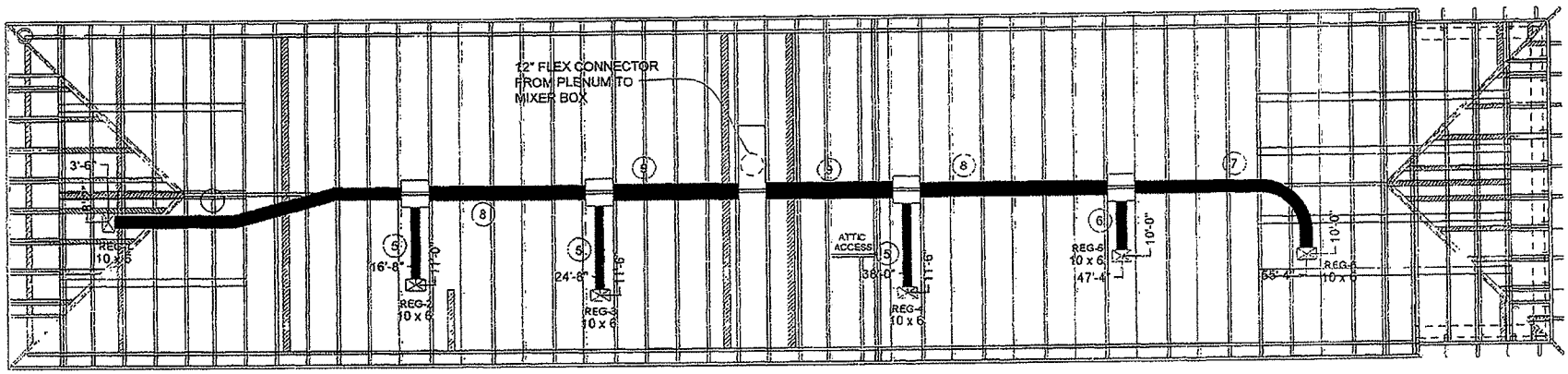

APPROVED
BY
STATE FIRE MARSHAL'S OFFICE
STATE OF MISSISSIPPI
DATE: 8/16/07

APPROVED BY
SEP - 5 2007
NTA INC

CHRIS D. WALDREP
REGISTERED PROFESSIONAL ENGINEER
16323
STATE OF MISSISSIPPI
8/16/07
P.E. STAMP

CAVALIER HOME BUILDERS

REVISIONS	SCALE: 3/16" = 1'-0"	APPROVED BY: —	**STATE OF MISSISSIPPI**	TITLE: OHD & CEILING REFERENCE	MODEL NO: 09-B1014
—	DATE: 8/16/07	DRAWN BY: —	MISSISSIPPI EMERGENCY MANAGEMENT AGENCY	HOUSE SIZE: 16 x 70 --- 3BR 1BATH	DRAWING NO: 17 of 51

APPROVED
BY
STATE FIRE MARSHAL'S OFFICE
STATE OF MISSISSIPPI
DATE: 9/6/07

SEE PAGE 30 FOR SHEETROCK / OSB LAYOUT

NOTE: EDGERAIL IS NOT USED IN PORCH AREA OR REAR ENDWALL

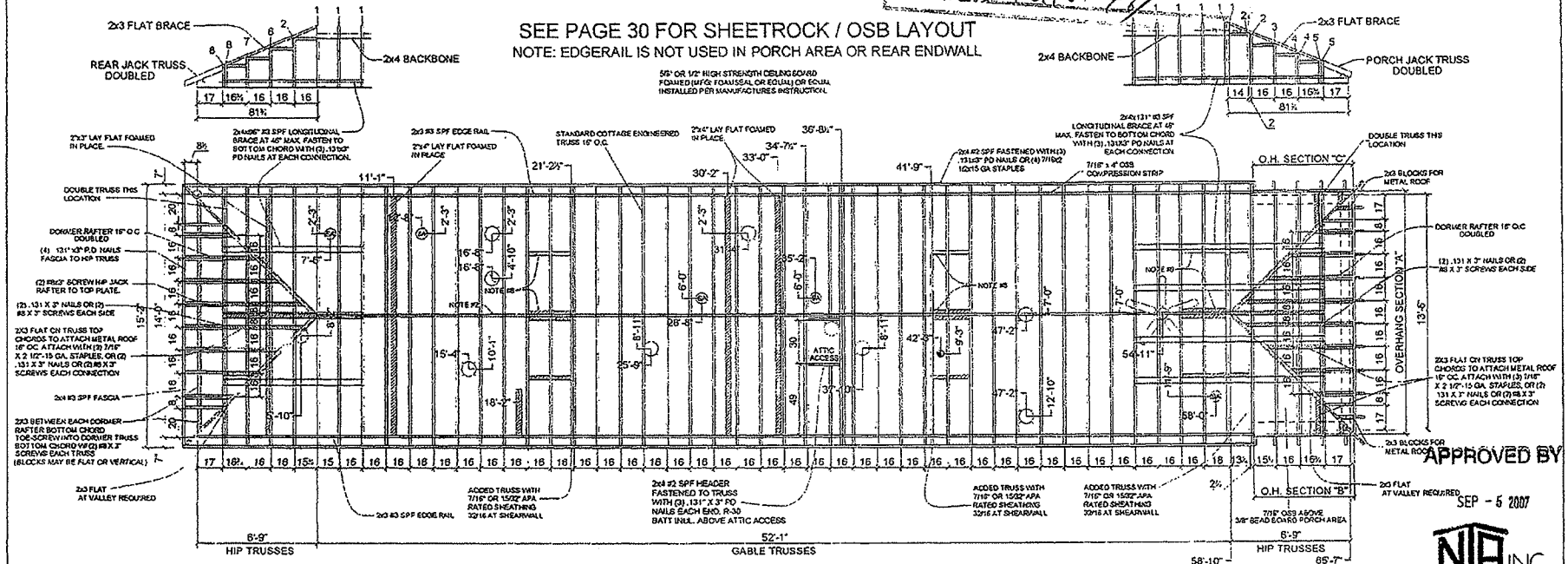

NOTES:

1) ALL MEASUREMENTS TAKEN FROM THE REAR & EDGE OF FLOOR.
2) 2x4 BACKBONE FASTENED TO RAFTER KING POST WITH (2) 7/16" x 2 1/2" - 15 GA. STAPLES OR (2) .131 x 3" PD NAILS PER CONNECTION.
3) FASTEN RIM RAIL TO RAFTERS WITH (5) 7/16" x 2 1/2" - 15 GA. STAPLES.
4) SPLICE RIM RAIL WITH 1 1/2" x 12" - 26 GA. STRAPS (1 EACH SIDE) FASTENED WITH (7) 1" x 3/4" - 16 GA. STAPLES PER STRAP END.
5) FOAMSEAL RAFTERS (3/4" H. x 1" W. AVERAGE BEAD SIZE) EACH SIDE OF SPLICE JOINT RAFTERS AND ONE SIDE OF INTERMEDIATE RAFTERS.
6) RESERVED.
7) RESERVED
8) ROOF DIAPHRAGM BLOCKING REQUIRED. BLOCK ROOF SHEATHING AT ALL EDGES IN TRUSS BAYS NOTED. BLOCKS MAY BE 2X3 #3 SPF FASTENED TO TRUSSES WITH (2) 10d NAILS TOED.
9) 7/16" OSB APA RATED SHEATHING 32/16 FASTENED TO END TRUSSES AT SHEARWALL AND AT INTERIOR SHEARWALL WITH 7/16" X 1 1/2"-15 GA STAPLES 3" O.C. TOP AND BOTTOM CHORD.
10) 7/16" X 4" WOOD COMPRESSION STRIP ON TOP OF SIDEWALLS ONLY.

APPROVED BY
SEP - 5 2007
NTA INC

CHRIS D. WALDREP
REGISTERED PROFESSIONAL ENGINEER
16328
STATE OF MISSISSIPPI
7/16/07
P.E. STAMP

CAVALIER HOME BUILDERS

REVISIONS:	SCALE:	APPROVED BY:		TITLE:	MODEL NO:
---	NTS = 1'-0"	---	**STATE OF MISSISSIPPI**	CEILING CONSTRUCTION (16" O.C.)	09-B1014
	DATE: 7/16/07	DRAWN BY: ---	MISSISSIPPI EMERGENCY MANAGEMENT AGENCY	HOUSE SIZE: 16 x 70 --- 3BR 1BATH	DRAWING NO.: 18 of 51

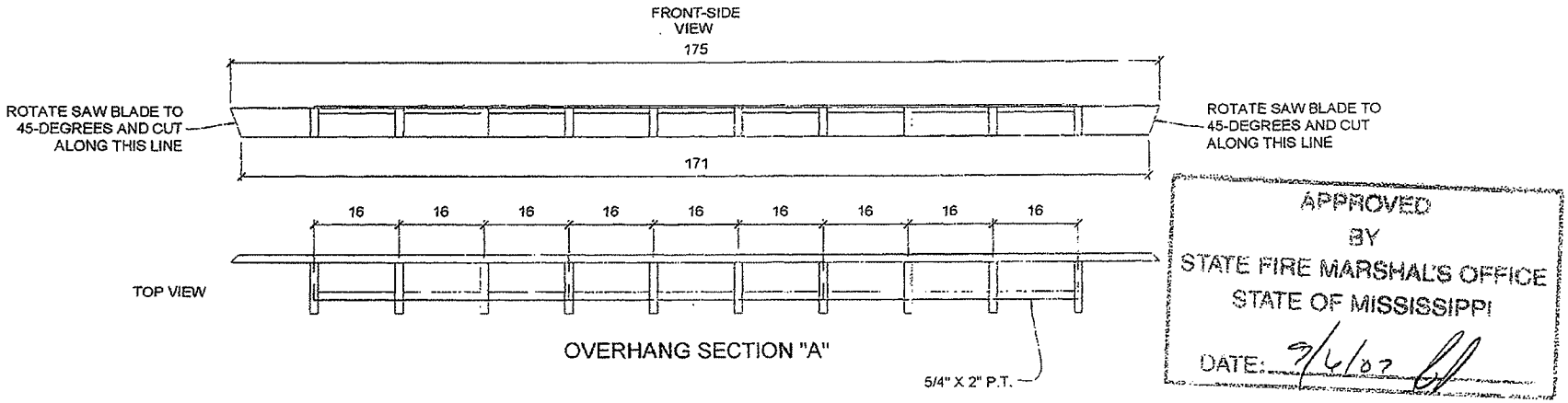

APPROVED
BY
STATE FIRE MARSHAL'S OFFICE
STATE OF MISSISSIPPI
DATE: 9/6/07

NOTE: BEAD BOARD GROOVES ARE PARALLEL TO TAILS

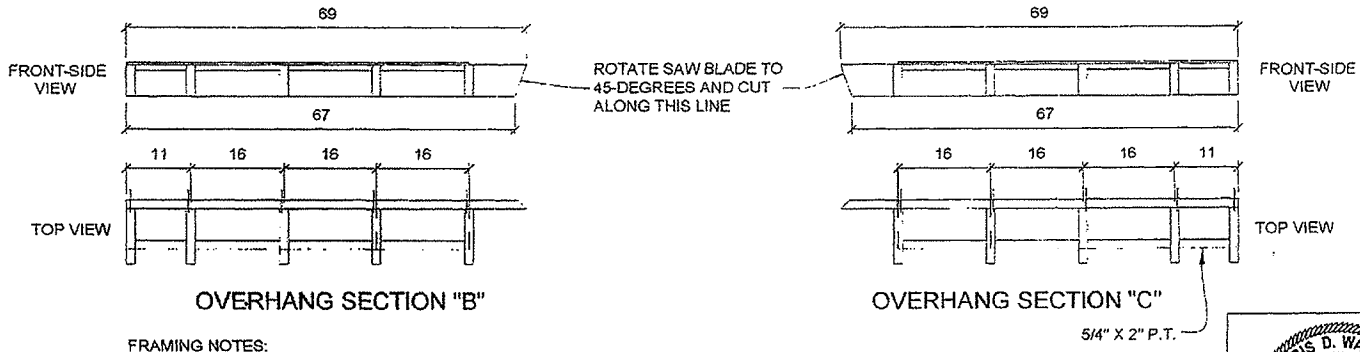

APPROVED BY
SEP - 5 2007
NTA INC

FRAMING NOTES:
1) RAFTER TAILS ARE TO BE P.T. #3 SYP MIN.
2) BACK PLATE TO BE #3 SYP NON-TREATED MIN.
3) RESERVED.
4) FASTEN BEAD BOARD DECKING TO SECTIONS WITH 7/16" X 1 1/2" STAPLES 4" O.C.
5) FASTEN OVERHANG SECTIONS TO MAIN ROOF PER DETAILS PAGE 21.

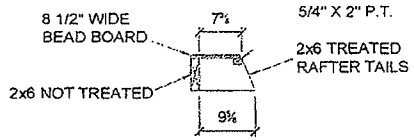

CHRIS D. WALDREP
REGISTERED PROFESSIONAL ENGINEER
16328
STATE OF MISSISSIPPI
7/16/07
P.E. STAMP

CAVALIER HOME BUILDERS

REVISIONS:	SCALE:	APPROVED BY:	STATE OF MISSISSIPPI	TITLE:	MODEL NO:
---	NTS = 1'-0"	---	MISSISSIPPI EMERGENCY MANAGEMENT AGENCY	PORCH OVERHANG FRAMING DETAILS	09-B1014
	DATE: 7/16/07	DRAWN BY: ---		HOUSE SIZE: 16 x 70 --- 3BR 1BATH	DRAWING NO: 19 of 51

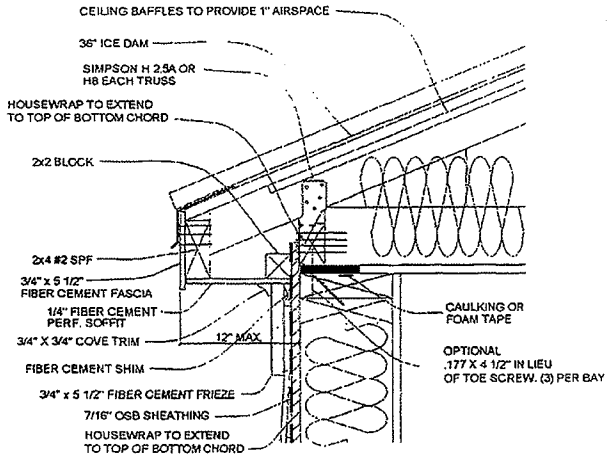

STANDARD SIDEWALL OVERHANG B/20

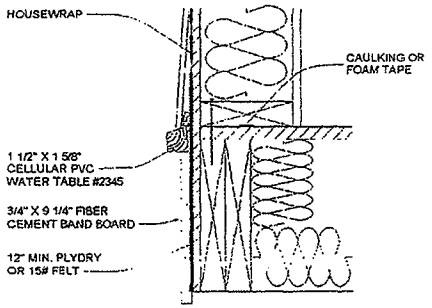

WATER TABLE DETAIL C/20

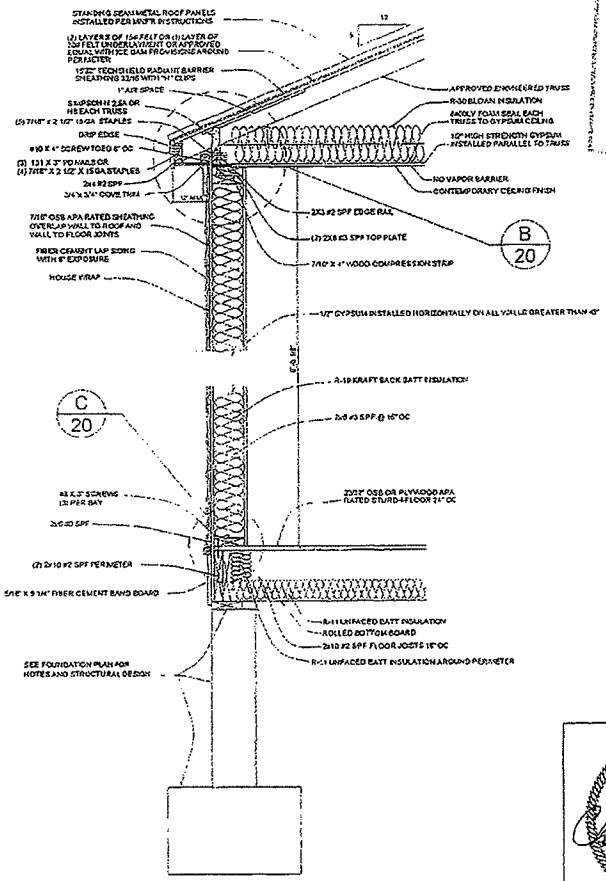

SIDEWALL AND ENDWALL WALL SECTION A/20

APPROVED
BY
STATE FIRE MARSHAL'S OFFICE
STATE OF MISSISSIPPI
DATE: 8/16/07

APPROVED BY
SEP - 5 2007
NTA INC

CHRIS D. WALDREP
REGISTERED PROFESSIONAL ENGINEER
16328
STATE OF MISSISSIPPI
8/16/07
P.E. STAMP

CAVALIER HOME BUILDERS

REVISIONS	SCALE:	APPROVED BY:	STATE OF MISSISSIPPI	TITLE:	MODEL NO:
—	NTS = 1'-0"	—		WALL SECTION - SIDEWALL & ENDWALL	09-B1014
	DATE: 8/16/07	DRAWN BY: —	MISSISSIPPI EMERGENCY MANAGEMENT AGENCY	HOUSE SIZE: 16 x 70 — 3BR 1BATH	DRAWING NO: 20 of 51

APPROVED
BY
STATE FIRE MARSHAL'S OFFICE
STATE OF MISSISSIPPI
DATE: 9/4/07

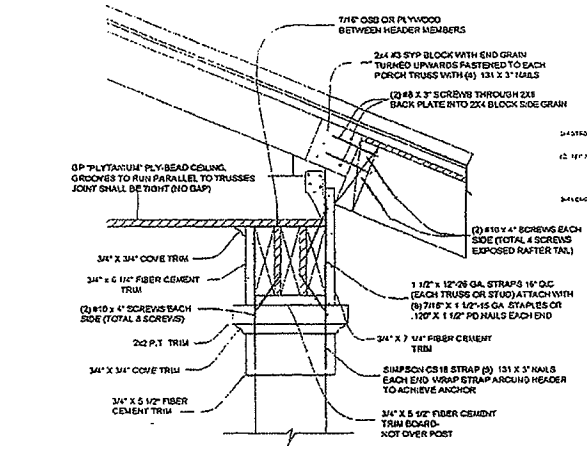

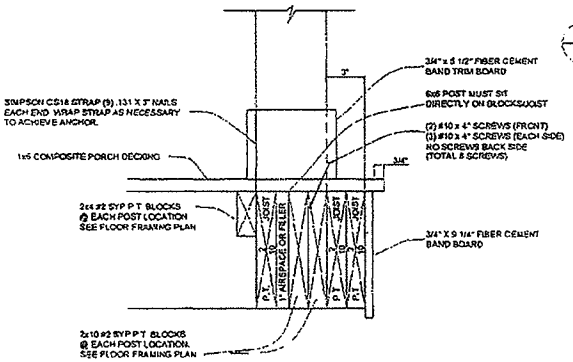

PORCH POST BANDING DETAILS B/21

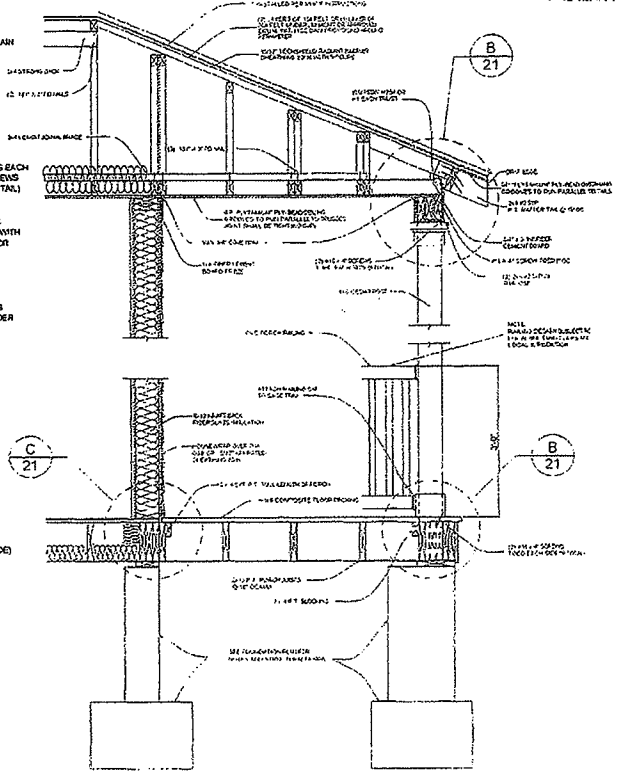

PORCH SECTION A/21

NOTE: STRAP QUANTITY MAY BE DOUBLED AND THE FASTENER QUANTITY MAY BE REDUCED BY HALF TO ACHIEVE ANCHOR.

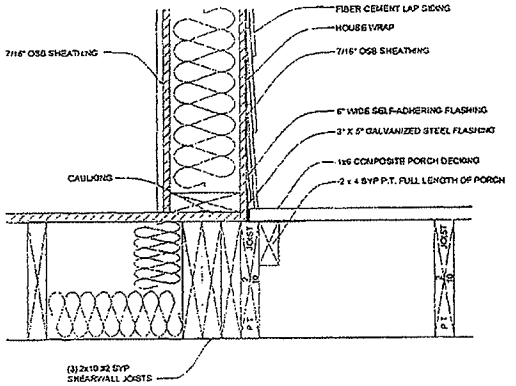

ENDWALL TO PORCH TRANSITION C/21

APPROVED BY
SEP - 5 2007
NTA INC

CHRIS D. WALDREP REGISTERED PROFESSIONAL ENGINEER 16328 STATE OF MISSISSIPPI
8/16/07
P.E. STAMP

CAVALIER HOME BUILDERS

REVISIONS	SCALE	APPROVED BY	STATE OF MISSISSIPPI	TITLE	MODEL NO
----	NTS = 1'-0"	----		WALL SECTION - PORCH	09-B1014
	DATE 8/16/07	DRAWN BY ----	MISSISSIPPI EMERGENCY MANAGEMENT AGENCY	HOUSE SIZE 16 x 70 — 3BR 1BATH	DRAWING NO 21 of 51

APPROVED
BY
STATE FIRE MARSHAL'S OFFICE
STATE OF MISSISSIPPI

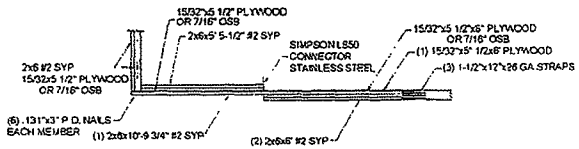

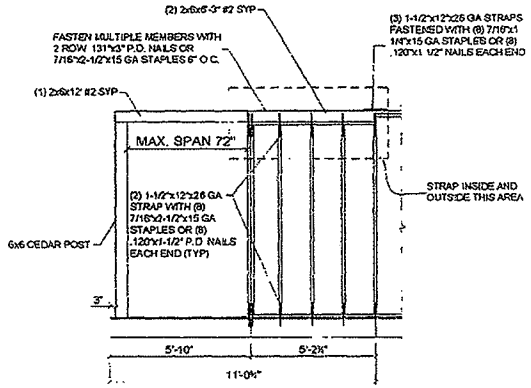

A/22 PORCH FRAMING DETAIL
SCALE: NONE

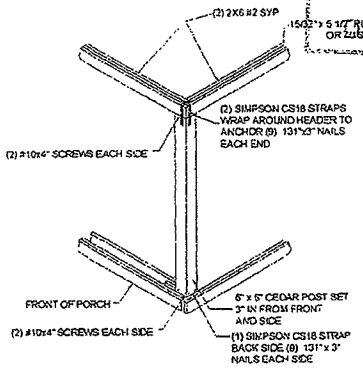

B/22 CORNER POST DETAIL
SCALE: NONE

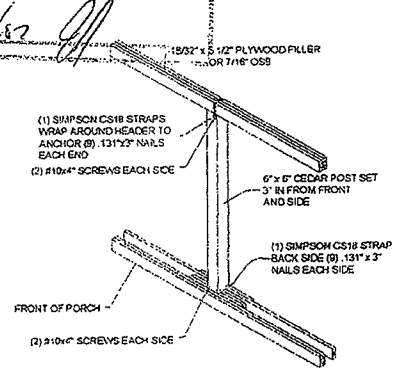

C/22 MIDDLE POST DETAIL
SCALE: NONE

NOTE:
ALL PLYWOOD 15/32 APA RATED SHEATHING 32/16 OR 7/16" OSB

APPROVED BY
SEP - 5 2007
NTA INC

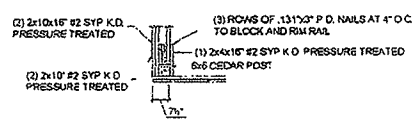

D/22 BLOCKING FOR CORNER POST DETAIL
SCALE: NONE

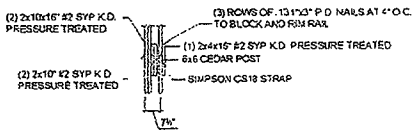

E/22 BLOCKING FOR MIDDLE POST DETAIL
SCALE: NONE

CHRIS D. WALDREP
REGISTERED PROFESSIONAL ENGINEER
16328
STATE OF MISSISSIPPI
7/16/07
P.E. STAMP

CAVALIER HOME BUILDERS

REVISIONS:	SCALE: NTS = 1'-0"	APPROVED BY:	STATE OF MISSISSIPPI	TITLE: PORCH FRAMING DETAILS	MODEL NO: 09-B1014
—	DATE: 7/16/07	DRAWN BY: —	MISSISSIPPI EMERGENCY MANAGEMENT AGENCY	HOUSE SIZE: 16 x 70 — 3BR 1BATH	DRAWING NO: 22 of 51

APPROVED
BY
STATE FIRE MARSHAL'S OFFICE
STATE OF MISSISSIPPI
DATE: 9/6/07

NOTES:
FOUNDATION TO BE DESIGNED TO MEET THE NOTED LOADS. FOUNDATION DESIGN AND TIE DOWNS MUST BE APPROVED BY LOCAL LICENSE ENGIEER/ARCHITECT

FOUNDATION BASE ON
2000 PSF SOIL & 1200 PSF SOIL

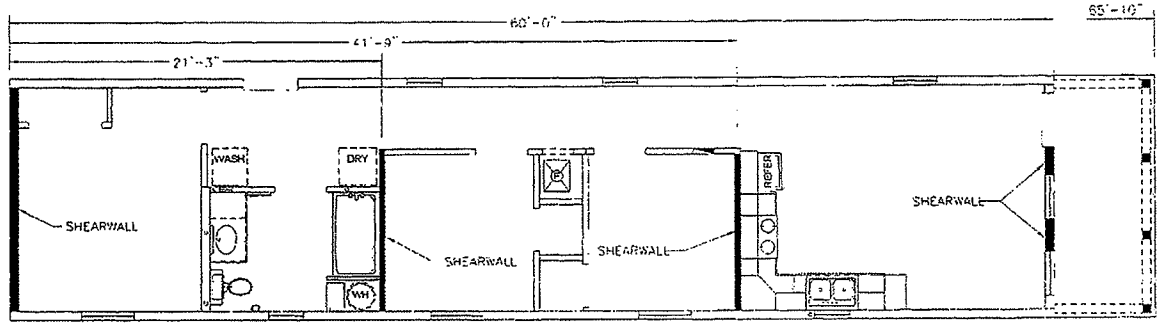

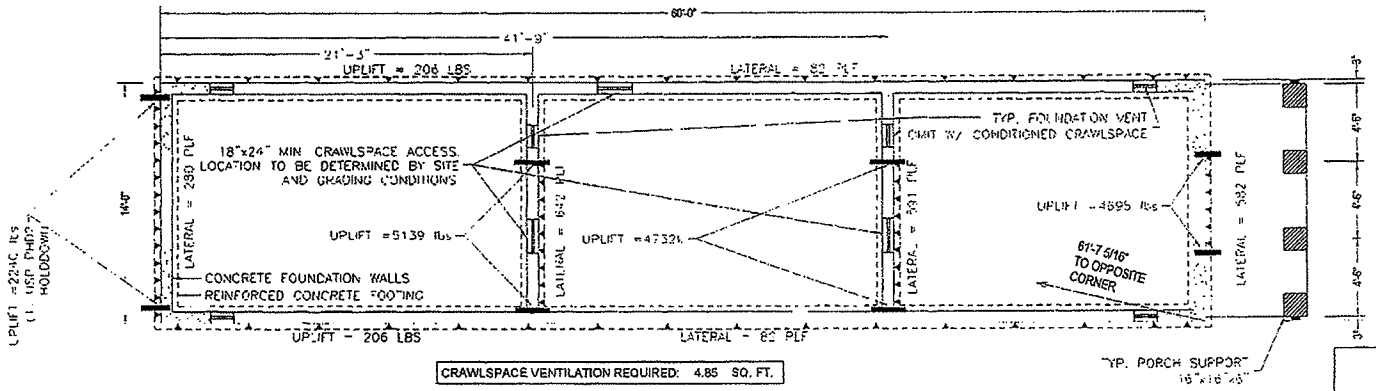

▼ = SIMPSON LTP4 PLATE, FASTEN TO SILL PLATE AND RIM JOIST W/(6) 8Dx1-1/2" NAILS (6) PER EACH MEMBER

▬ = (2) USP PHD2 HOLDOWNS

NOTE: SEE PAGE 6B FOR ADDITIONAL FOUNDATION INFORMATION

MAX. GROUND SNOW LOAD : 30 PSF
MAX. WIND SPEED: 150 MPH
HUD WIND ZONE 3
WIND EXPOUSURE: B
MAX MEAN ROOF HEIGHT: 30'
SEISMIC DESIGN CATEGORY: C

CRAWLSPACE VENTILATION REQUIRED: 4.85 SQ. FT.

"OFF-FRAME" FOUNDATION NOTES:

1) FOUNDATION LAYOUT IS APPLICABLE TO NOTED MAXIMUM SNOW LOADING AND MINIMUM SOIL BEARING PRESSURE. REFER TO INSTALLATION INSTRUCTION MANUAL FOR OTHER APPLICABLE INFORMATION. CONSULT LOCAL OFFICIALS AND THE APPLICABLE LOCAL CODES FOR OTHER REQUIREMENTS (I.E. DRAINAGE, DAMP-PROOFING, BACKFILL SUPPORT, ETC.).
2) FOR DEVIATIONS AND/OR OTHER FOUNDATION DESIGNS CONSULT A LOCAL PROFESSIONAL ENGINEER AND YOUR LOCAL BUILDING OFFICIAL.
3) SILL PLATE FASTENING TO BE PER INSTALLATION INSTRUCTION AND/OR LOCAL CODES. SILL FASTENING REQUIREMENT IS PER APPLICABLE WIND SPEED AND SEISMIC ZONES. SEE YOUR HOME DATA PLATE FOR APPLICABLE ZONES.
4) CONCRETE COMPRESSIVE STRENGTH (FC'): 3000 PSI.

APPROVED BY
SEP - 5 2007
NTA INC

CHRIS D. WALDREP
REGISTERED PROFESSIONAL ENGINEER
18328
STATE OF MISSISSIPPI
7/16/07
P.E. STAMP

CAVALIER HOME BUILDERS

REVISIONS	SCALE	APPROVED BY		TITLE	MODEL NO
----	NTS = 1'-0"	----	STATE OF MISSISSIPPI	CRAWL SPACE FOUND. PLAN (30 PSF)	09-B1014
	DATE 7/16/07	DRAWN BY ----	MISSISSIPPI EMERGENCY MANAGEMENT AGENCY	HOUSE SIZE 16 x 70 --- 3BR 1BATH	DRAWING NO. 23 of 51

APPROVED
BY
STATE FIRE MARSHAL'S OFFICE
STATE OF MISSISSIPPI
DATE: 9/6/07

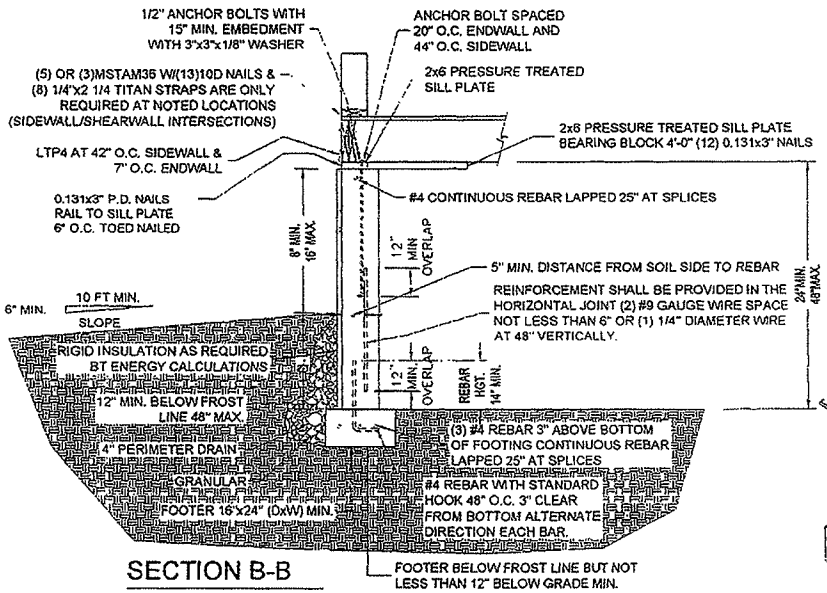

SECTION B-B

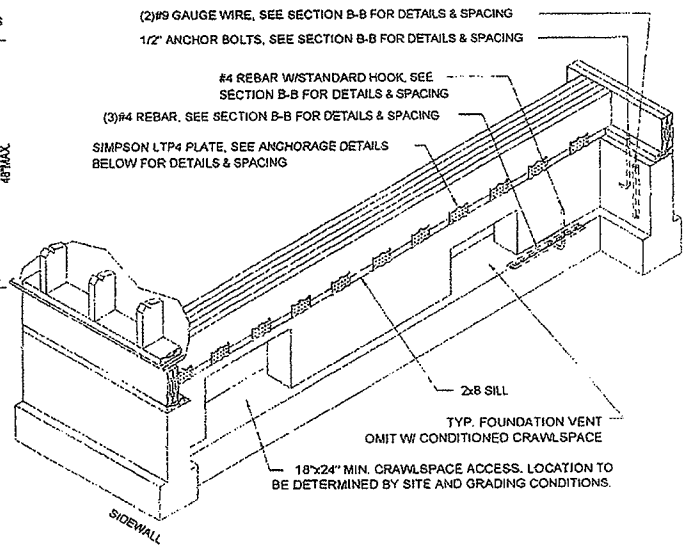

INTERIOR FOUNDATION SHEARWALL DETAIL

NOT TO SCALE

APPROVED BY
SEP - 5 2007
NTA INC

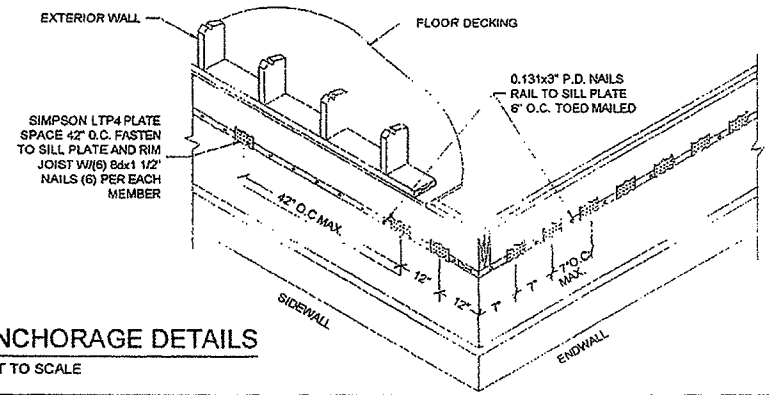

ANCHORAGE DETAILS

NOT TO SCALE

WIND SPEED 150 MPH & HUD WIND ZONE 3
SEISMIC DESIGN CATEGORY C
SOIL CLASS: GW, GP, SW, AND SP.
LATERAL SOIL LOAD: 30 PSF/FT
MAX. HEIGHT: 4'-0"
MAX. UNBALANCED FILL" 3'-4"

CHRIS D. WALDREP REGISTERED PROFESSIONAL ENGINEER 18323 STATE OF MISSISSIPPI

7/16/07
P.E. STAMP

CAVALIER HOME BUILDERS

REVISIONS	SCALE:	APPROVED BY	STATE OF MISSISSIPPI	TITLE:	MODEL NO.
—	NTS = 1'-0"	—		CRAWL SPACE FOUND. DETAILS (30 PSF)	09-B1014
	DATE: 7/16/07	DRAWN BY: —	MISSISSIPPI EMERGENCY MANAGEMENT AGENCY	HOUSE SIZE: 16 x 70 — 3BR 1BATH	DRAWING NO. 24 of 51

APPROVED
BY
STATE FIRE MARSHAL'S OFFICE
STATE OF MISSISSIPPI
DATE: 9/6/07

MAX. GROUND SNOW LOAD : 20 PSF
MAX. WIND SPEED: 130 MPH
WIND EXPOUSURE: B
HUD = WIND ZONE 3
MAX MEAN ROOF HEIGHT: 30'
SEISMIC DESIGN CATEGORY: C

FOOTING SIZE W/ CMU PIERS	SIZE MAX. LOAD (LBS.)
DOUBLE 17" X 23" PADS	6.0K
24"X24" ABS PADS	4.8K
16"X16" ABS PADS	2.1K

FOUNDATION BASED ON
1200 PSF SOIL

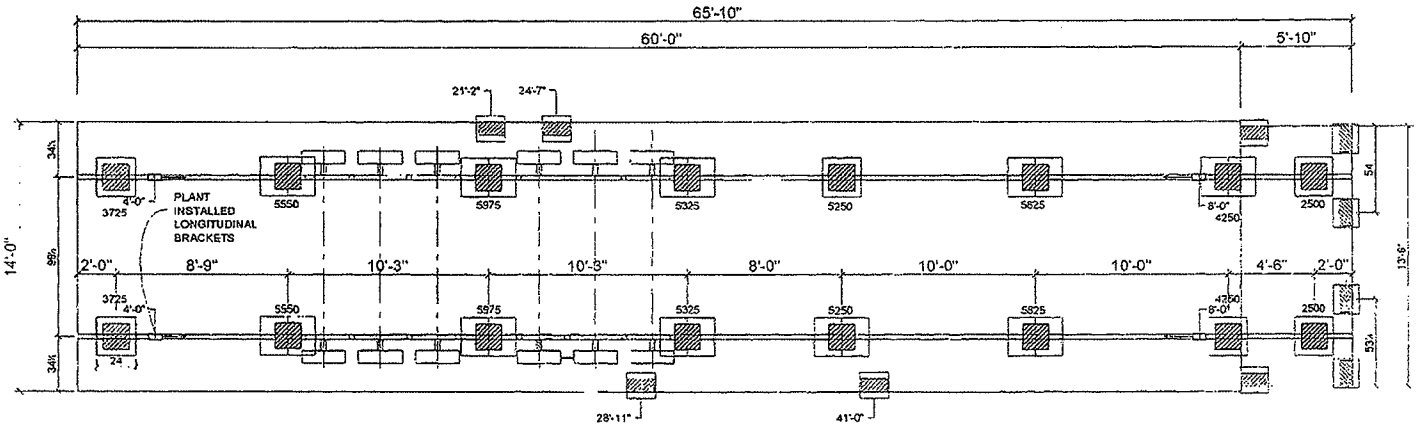

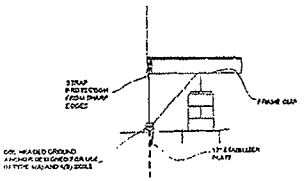

APPROVED BY
SEP - 5 2007
NTA INC

'ON-FRAME STANDARD I-BEAM' FOUNDATION NOTES:

1) FOUNDATION LAYOUT IS APPLICABLE TO NOTED MAX. SNOW LOADING, WIND LOAD, SEISMIC CATEGORY & MIN. SOIL BEARING PRESSURE. REFER TO THE INSTALLATION INSTRUCTION MANUAL FOR OTHER APPLICABLE INFORMATION. CONSULT LOCAL OFFICIALS AND
2) THE APPLICABLE LOCAL CODES FOR OTHER REQUIREMENTS (I.E. DRAINAGE, CAMP-PROOFING, BACKFILL SUPPORT, ETC.).
FOR DEVIATIONS IN OR OTHER FOUNDATION DESIGNS CONSULT A LICENSED PROFESSIONAL ENGINEER & YOUR LOCAL BUILDING OFFICIAL
3) CONCRETE COMPRESSIVE STRENGTH (FC'): 3000 PS MINIMUM.
4) ALL FOOTINGS MUST BE 12" MIN. INTO NATURAL SOIL & MUST BE BELOW FROST LINE.
5) SHEARWALL AND PERIMETER PIER LOCATIONS MUST BE MARKED TO LOCATE PIERS ON SITE.
6) GROUND ANCHORS TO BE APPROVED FOR USE IN TYPE 4(a) AND 4(b) SOILS.

CHRIS D. WALDRED
REGISTERED PROFESSIONAL
ENGINEER
16328
STATE OF MISSISSIPPI
7/16/07
P.E. STAMP

CAVALIER HOME BUILDERS

REVISIONS	SCALE	APPROVED BY:	STATE OF MISSISSIPPI	TITLE	MODEL NO.
---	NTS = 1'-0"	---	MISSISSIPPI EMERGENCY MANAGEMENT AGENCY	TEMPORARY FOUNDATION REQ.	09-B1014
	DATE 7/16/07	DRAWN BY ---		HOUSE SIZE 16 x 70 --- 3BR 1BATH	DRAWING NO. 25 of 51

APPROVED
BY
STATE FIRE MARSHAL'S OFFICE
STATE OF MISSISSIPPI
DATE: 9/6/07

NOTES:

1. ALL ORGANIC AND DECAYABLE MATERIAL, SUCH AS GRASS, ROOTS, SCRAP WOOD MUST BE REMOVED BELOW THE HOME.
2. THE SITE SHALL BE PROPERLY GRADED TO PERMIT WATER TO DRAIN UNDER AND AWAY FROM THE HOME.
3. 6-MIL POLYETHYLENE SHEETING VAPOR BARRIER MUST BE INSTALLED COVERING THE ENTIRE AREA BENEATH THE HOME. THE SHEETING SHALL OVERLAP AT LEAST 6" AT ALL JOINTS.
4. THE FOOTING MAY ABS, PRE-CAST OR POUR-IN-PLACE CONCRETE. FOOTINGS MAY ALSO BE DESIGNED BY A REGISTERED ENGINEER FOR THE LOCAL SOIL CONDITIONS.
5. PIERS TO BE DOUBLE 8"X16" BLOCK. MORTAR OR EXTERIOR STRUCTURAL COATING WHEN REQUIRED BY LOCAL OFFICIALS / CODES.
6. THE PIER SHALL BE CAPPED WITH 2" MAXIMUM HIGH CONCRETE OR WOOD CAP BLOCKS AND 4"X8" HARDWOOD SHIMS TO LEVEL THE HOME. THE SHIMS SHALL COVER THE ENTIRE WIDTH OF THE CAP BLOCKS AND USED IN PAIRS AND DRIVEN TIGHTLY SO THEY DO NOT OCCUPY MORE THAN ONE INCH OF VERTICAL SPACE.
7. THE PIER SHALL BE SPACED A MAXIMUM OF 2 FEET FROM EACH END OF HOME AND REFER TO PAGE 26 FOR SPACING.
8. ADDITIONAL PIERS SHALL BE LOCATED UNDER THE POSTS.
9. THE ANCHOR STRAP SHALL BE A MINIMUM TYPE 1, FINISH B, GRADE ONE STEEL STRAPPING, 1 1/4" WIDE AND 0.035 INCHES THICK CERTIFIED BY A REGISTER ENGINEER CONFORMING WITH ASTM STANDARD D3953.91.
10. THE GROUND ANCHORS MUST HAVE A MINIMUM DESIGN CAPACITY OF 3150 LBS FOR TYPE 4(a) AND (b) SOILS AND CERTIFIED BY A REGISTERED ENGINEER.
11. THE GROUND ANCHORS MUST BE INSTALLED PER THE MANUFACTURERS INSTALLATION REQUIREMENTS.
12. THE TIE-DOWN STRAPS MUST BE PRETENSIONED PER THE MANUFACTURERS INSTALLATION INSTRUCTIONS.
13. ALL GROUND ANCHORS MUST BE LOCATED 12" ABOVE THE WATER TABLE.
14. ALL GROUND ANCHORS MUST BE INSTALLED BELOW THE FROST LINE.
15. VERTICAL AND DIAGONAL TIES 12" FROM PORCH END AND 4'-0" O.C. AND IN LINE WITH DIAGONAL TIES.
16. ADDITIONAL VERTICAL TIES SHALL BE LOCATED AT INTERIOR SHEARWALL LOCATIONS.
17. LONGITUDINAL TIES AT EACH I-BEAM EACH END.
18. DUE TO LOCAL SOIL CONDITIONS A 17" STABILIZER IS TO BE USED WITH THE GROUND ANCHORS.

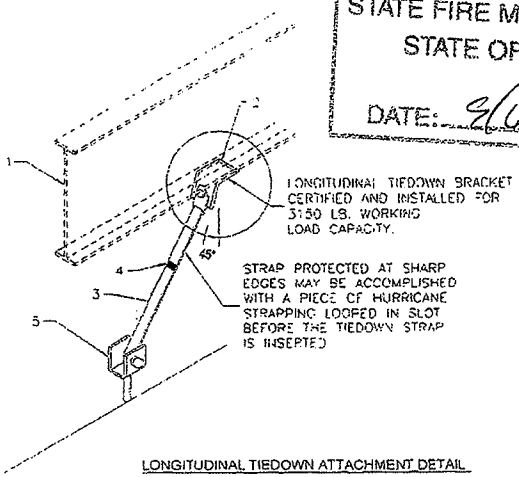

LONGITUDINAL TIEDOWN ATTACHMENT DETAIL

1. TYPICAL LONGITUDINAL I-BEAM
2. FACTORY INSTALLED TIEDOWN BRACKET
3. LONGITUDINAL TIEDOWN STRAP
4. BANDING SEAL
5. GROUND ANCHOR-INSTALLED TO FULL DEPTH

APPROVED BY
SEP - 5 2007
NTA INC

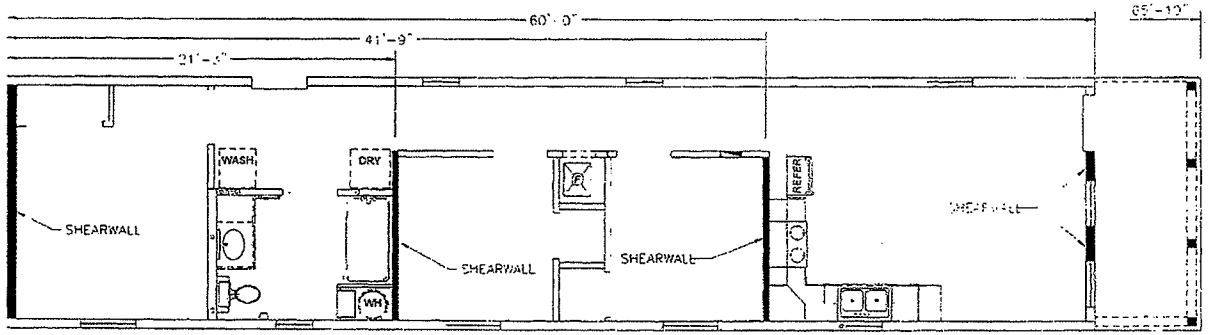

CHRIS D. WALDRED
REGISTERED PROFESSIONAL
ENGINEER
16328
STATE OF MISSISSIPPI
7/16/07
P.E. STAMP

CAVALIER HOME BUILDERS

REVISIONS:	SCALE	APPROVED BY:		TITLE	MODEL NO
---	NTS = 1'-0"	---	**STATE OF MISSISSIPPI**	TEMPORARY FOUND. REQ. DETAILS	09-B1014
	DATE 7/16/07	DRAWN BY ---	MISSISSIPPI EMERGENCY MANAGEMENT AGENCY	HOUSE SIZE 16 x 70 --- 3BR 1BATH	DRAWING NO 26 of 51

APPROVED
BY
STATE FIRE MARSHAL'S OFFICE
STATE OF MISSISSIPPI
DATE: 8/6/07

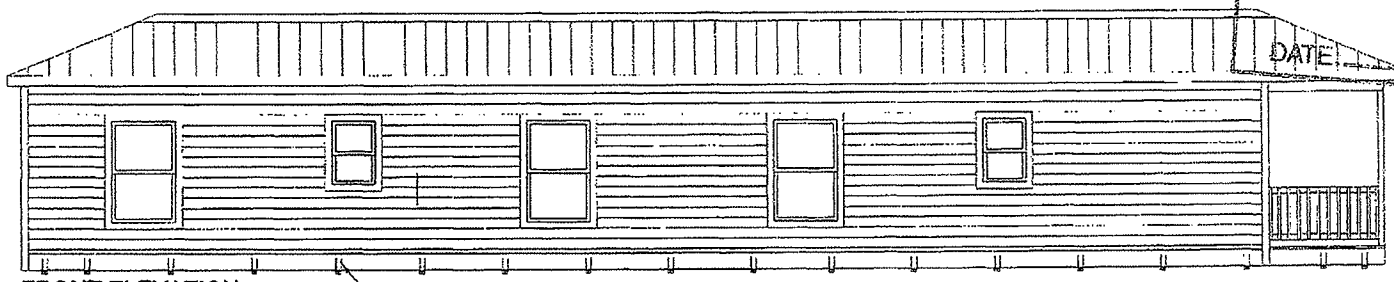

FRONT ELEVATION

48" TYP.

* INSTALL BP-10 TIE CONNECTOR BY BUILDING TECHNOLOGIES (FASTEN TO BOTTOM PLATE W/(2) #6x3" SCREWS) OR 16 GA. RIM JOIST BRACKET BY MASTERCRAFT FASTEN TO RIM W/(5)0.131x1 1/2" NAILS OR (5)#6x1 1/2" SCREWS) OR EQUIVALENT 48" O.C.

* ALTERNATE ANGLE BRACKET MAY BE USED IN PLACE OF BP-10.
LAG HOLES = 7/16" DIA. TYP. TOLERANCE DIMENSIONS+/- 1/8"
SLOT = 1 1/2" X 3/8" (CENTERED), GAUGE" 11
MAX. BRACKET CAPACITY 1746 LBS.
BRACKET FASTENED TO PERIMETER JOIST WITH (2) 5/16" X 3" LAG SCREWS. PERIMETER JOIST DOES NOT HAVE TO BE PRE-DRILLED.

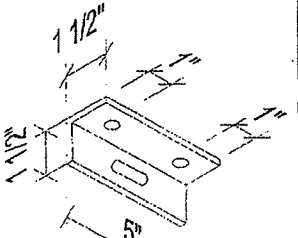

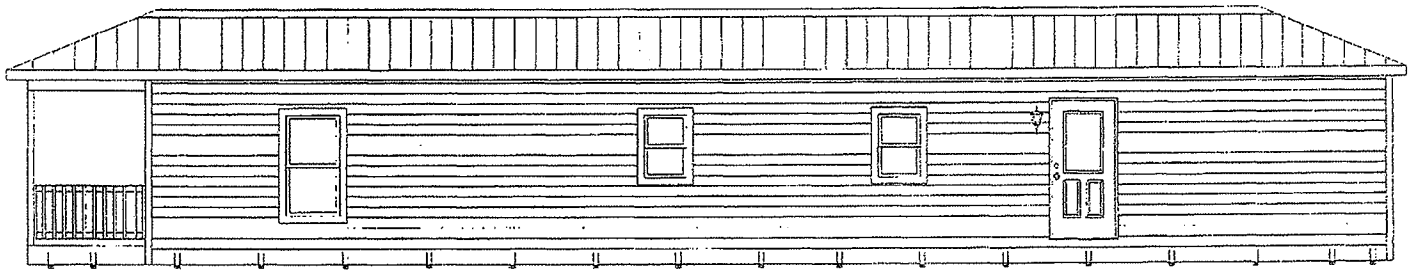

REAR ELEVATION

48" TYP.

APPROVED BY
SEP - 5 2007
NTA INC

NOTE:
1. MAY USE ANY OTHER EQUIVALENT METHODS FOR VERTICAL STRAPS.
2. CONNECTORS SHOWN ARE ONLY FOR TEMPORARY INSTALLS AND MUST BE REMOVED FOR PERMANENT SET UP.

TEMPORARY

CHRIS D. WALDREP
REGISTERED PROFESSIONAL
ENGINEER
16328
STATE OF MISSISSIPPI

7/16/07
P.E. STAMP

CAVALIER HOME BUILDERS

REVISIONS	SCALE	APPROVED BY	STATE OF MISSISSIPPI	TITLE	MODEL NO.
---	NTS = 1'-0"	---		TEMPORARY FOUND. TIE DOWN STRAPPING	09-B1014
	DATE 7/16/07	DRAWN BY ---	MISSISSIPPI EMERGENCY MANAGEMENT AGENCY	HOUSE SIZE 16 x 70 --- 3BR 1BATH	DRAWING NO. 27 of 51

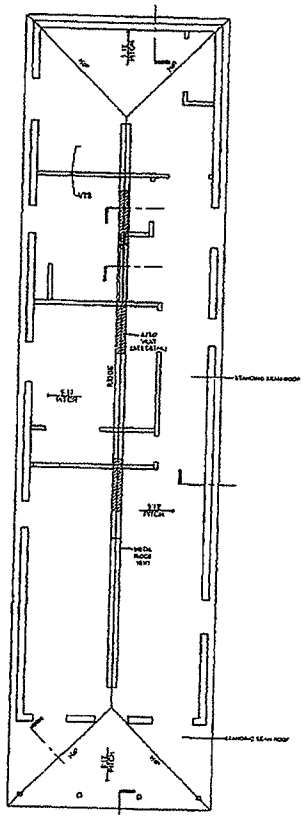

ROOF PLAN 1/8" = 1'-0"

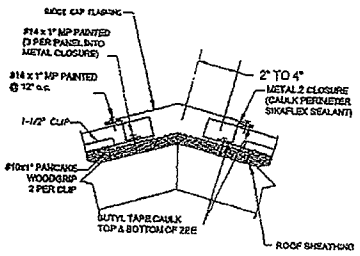

RIDGE / HIP DETAIL

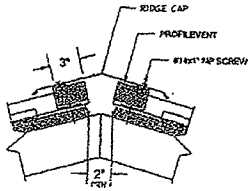

VENTED RIDGE DETAIL

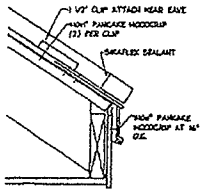

EAVE DETAIL

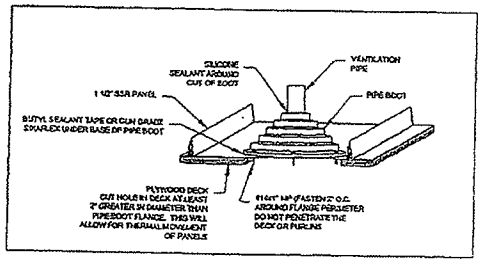

PIPE PENETRATION DETAIL

APPROVED
BY
STATE FIRE MARSHAL'S OFFICE
STATE OF MISSISSIPPI
DATE: 9/6/07

APPROVED BY
SEP - 5 2007
NTA INC

CHRIS D. WALDRED
REGISTERED PROFESSIONAL ENGINEER
16328
STATE OF MISSISSIPPI
7/16/07
P.E. STAMP

CAVALIER HOME BUILDERS

REVISIONS:	SCALE:	APPROVED BY:	STATE OF MISSISSIPPI	TITLE:	MODEL NO:
---	NTS = 1'-0"	---		METAL ROOF DETAILS	09-B1014
	DATE: 7/16/07	DRAWN BY: ---	MISSISSIPPI EMERGENCY MANAGEMENT AGENCY	HOUSE SIZE: 16 x 70 --- 3BR 1BATH	DRAWING NO: 28 of 51

APPROVED
BY
STATE FIRE MARSHAL'S OFFICE
STATE OF MISSISSIPPI
DATE: 5/6/07

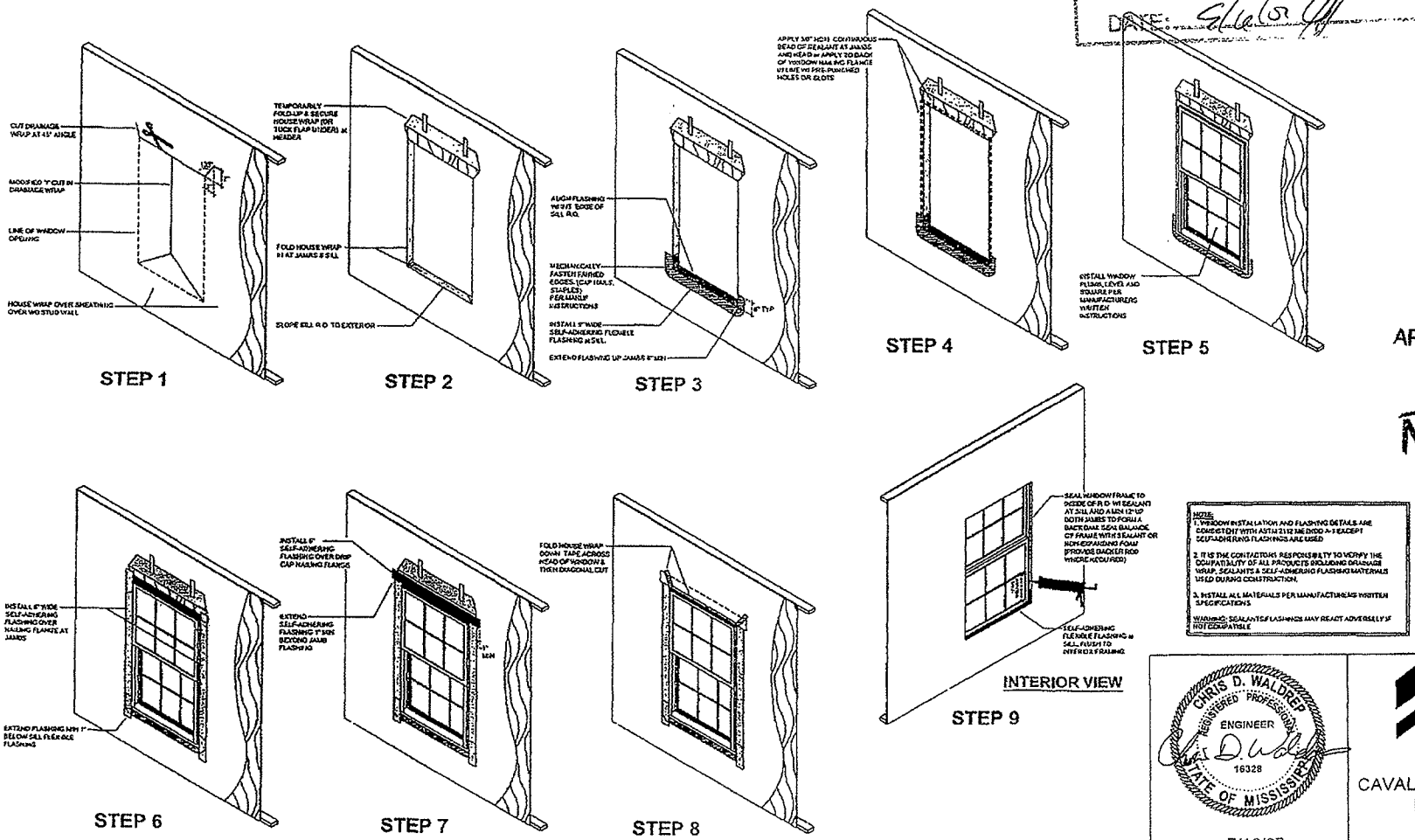

APPROVED BY
SEP - 5 2007
NTA INC

NOTE:
1. WINDOW INSTALLATION AND FLASHING DETAILS ARE CONSISTENT WITH ASTM 2112 MEDIUM A-1 EXCEPT SELF-ADHERING FLASHINGS ARE USED
2. IT IS THE CONTACTOR'S RESPONSIBILITY TO VERIFY THE COMPATIBILITY OF ALL PRODUCTS INCLUDING DRAINAGE WRAP, SEALANTS & SELF-ADHERING FLASHING MATERIALS USED DURING CONSTRUCTION.
3. INSTALL ALL MATERIALS PER MANUFACTURERS WRITTEN SPECIFICATIONS
WARNING: SEALANTS/FLASHINGS MAY REACT ADVERSELY IF NOT COMPATIBLE

WINDOW FLASHING INSTALLATION DETAILS

N.T.S

CHRIS D. WALDREP
REGISTERED PROFESSIONAL
ENGINEER
16328
STATE OF MISSISSIPPI
7/16/07
P.E. STAMP

CAVALIER
HOME
BUILDERS

REVISIONS:	SCALE:	APPROVED BY	STATE OF MISSISSIPPI	TITLE:	MODEL NO:
----	NTS = 1'-0"	----		WINDOW DETAILS	09-B1014
	DATE: 7/16/07	DRAWN BY: ----	MISSISSIPPI EMERGENCY MANAGEMENT AGENCY	HOUSE SIZE: 16 x 70 ---- 3BR 1BATH	DRAWING NO: 29 of 51

APPROVED
BY
STATE FIRE MARSHALS OFFICE
STATE OF MISSISSIPPI
DATE: 9/6/07

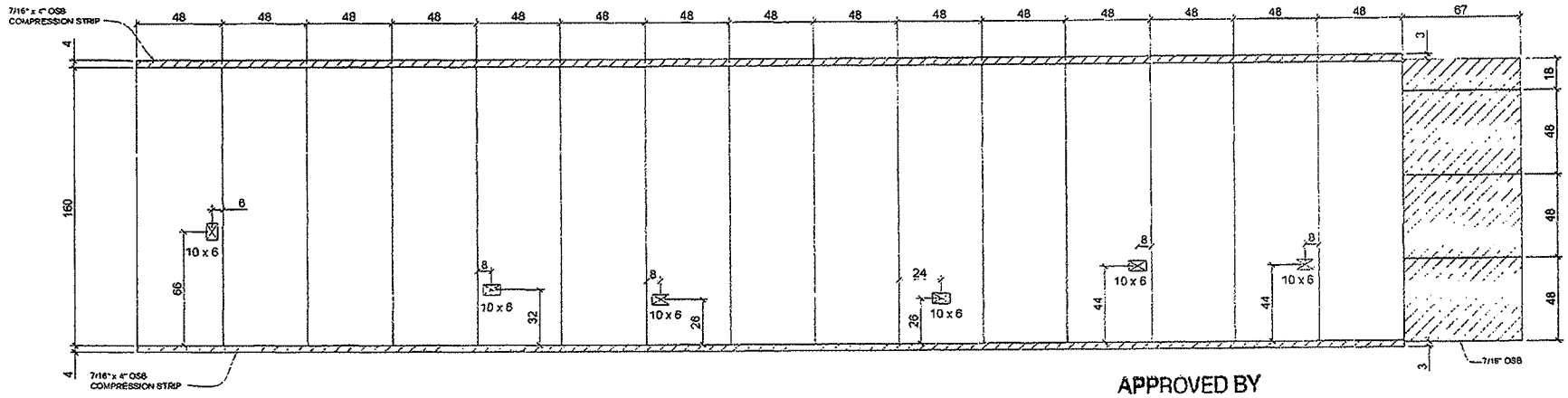

APPROVED BY

SEP - 5 2007

CEILING BOARD LAYOUT

NTA INC

CHRIS D. WALDREP
REGISTERED PROFESSIONAL
ENGINEER
16328
STATE OF MISSISSIPPI

8/16/07

P.E. STAMP

CAVALIER
HOME
BUILDERS

REVISIONS:	SCALE	APPROVED BY	STATE OF MISSISSIPPI	TITLE	MODEL NO.
---	NTS = 1'-0"	---		CEILING BOARD LAYOUT	09-B1014
	DATE 8/16/07	DRAWN BY ---	MISSISSIPPI EMERGENCY MANAGEMENT AGENCY	HOUSE SIZE 16 x 70 --- 3BR 1BATH	DRAWING NO. 30 of 51

APPROVED
BY
STATE FIRE MARSHAL'S OFFICE
STATE OF MISSISSIPPI
DATE: 9/4/07

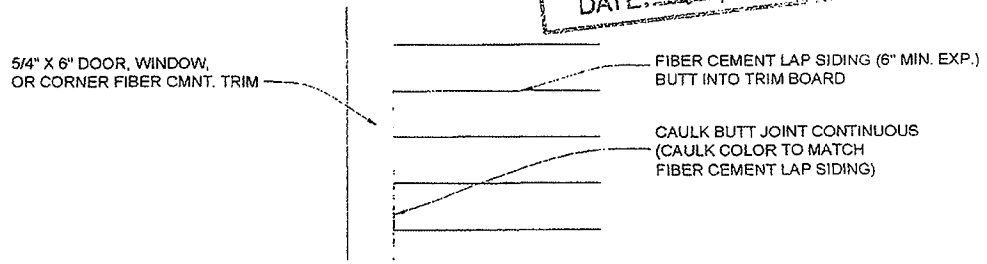

TRIM DETAIL

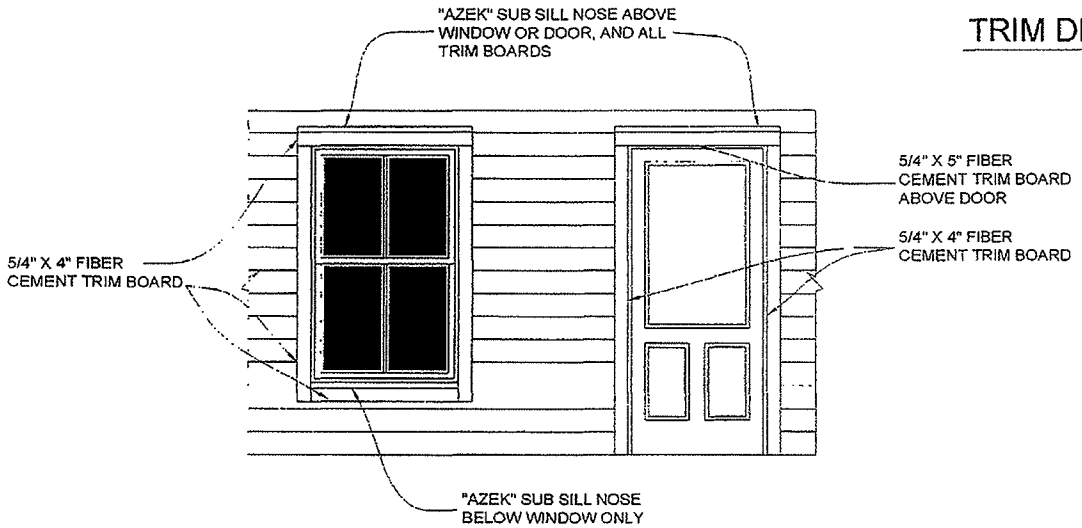

WINDOW & DOOR DETAIL

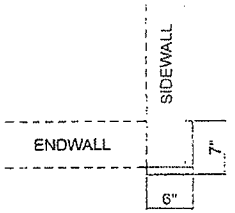

CORNER TRIM DETAIL

APPROVED BY
SEP - 5 2007
NTA INC

CHRIS D. WALDREP
REGISTERED PROFESSIONAL
ENGINEER
16328
STATE OF MISSISSIPPI
8/16/07
P.E. STAMP

CAVALIER
HOME
BUILDERS

REVISIONS:	SCALE: NTS = 1'-0"	APPROVED BY:	STATE OF MISSISSIPPI	TITLE: EXTERIOR DETAILS	MODEL NO: 09-B1014
---	DATE: 8/16/07	DRAWN BY: ---	MISSISSIPPI EMERGENCY MANAGEMENT AGENCY	HOUSE SIZE: 16 x 70 --- 3BR 1BATH	DRAWING NO: 31 of 51

APPROVED
BY
STATE FIRE MARSHALS OFFICE
STATE OF MISSISSIPPI
DATE: 9/6/07

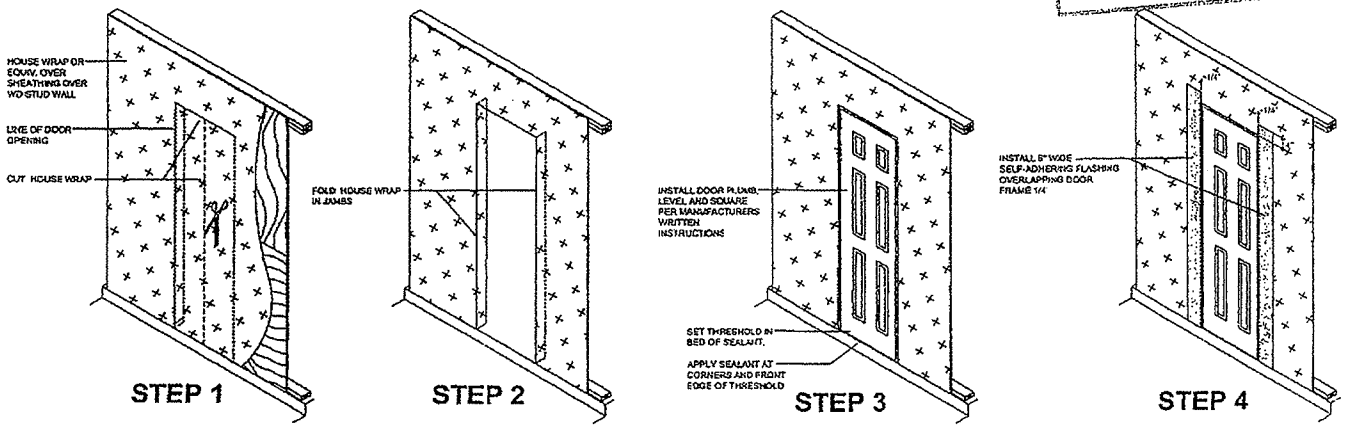

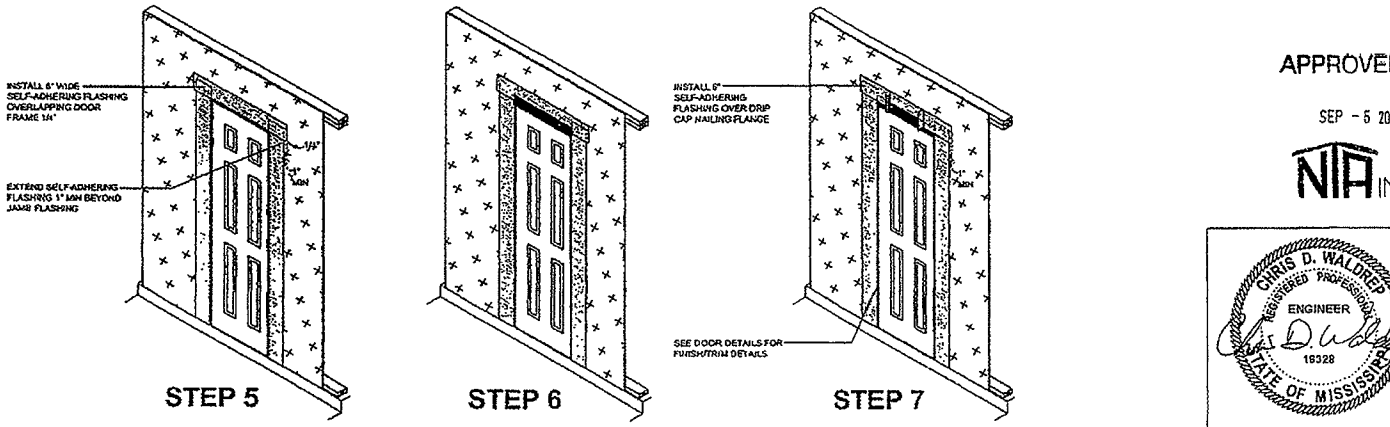

DOOR FLASHING INSTALLATION DETAILS NTS

APPROVED BY
SEP - 6 2007
NTA INC

CHRIS D. WALDRIEP
REGISTERED PROFESSIONAL
ENGINEER
18328
STATE OF MISSISSIPPI
7/16/07
P.E. STAMP

CAVALIER HOME BUILDERS

REVISIONS	SCALE	APPROVED BY:	STATE OF MISSISSIPPI	TITLE	MODEL NO
—	NTS = 1'-0"	—		DOOR DETAILS	09-B1014
	DATE 7/16/07	DRAWN BY —	MISSISSIPPI EMERGENCY MANAGEMENT AGENCY	HOUSE SIZE 16 x 70 — 3BR 1BATH	DRAWING NO 32 of 51

Unified Interior Standards - MS Cottage Model

GENERAL CEILING, WALL, & INTERIOR TRIM SPECIFICATIONS
(to be use throughout)

Interior Ceiling Details:

- Ceiling throughout shall be knocked down finish, painted with flat finish, ceiling color to be selected from paint Mfr. standard colors.
- Crown molding throughout shall be profile as shown:

3-1/4"

Interior Wall Details:

- Interior walls throughout shall be smooth tape and textured, latex, egg-shell finish. Standard wall colors to be selected from paint manufacturer's standard color chart.
  - Note three standard wall colors are specified: (1) Living/Kitchen, (2) Bathroom (3)Bedroom –'Master'.
- Wood running trim, doors, and casings, panels: to be consistent throughout unit. White or off-white, latex semi-gloss color to be selected from Paint Manufacturer's standard color chart. 1 coat primer, 2 coat finish color. No drips and splatters accepted. Smooth finish as required for professional finish.
- Baseboard molding throughout shall have profile as shown (rotated).

1/2" x 3-1/2"

Other:

- All electrical plates and outlets throughout shall be plastic mfgr standard: white or ivory, to be determined w/ interior color selection.
- All hardware and metal fixtures shall have a brushed aluminum or nickel color metal finish. All fixtures shall be metal and or/ glass. No plastic, copper or bronze finishes. Drawer slides, hinges, stops, and all miscellaneous pieces shall be white, backed on paint finish.
- Door and window trim shall be flat profile S4S 1x4" nominal, clear of knots and all disfigurements, finger jointed acceptable, sanded smooth.
- Compact fluorescent light bulbs shall be of the following type....
  - 15 Watt - Full Spectrum, High Definition or Cool White Compact Fluorescent (such as Long Star FE-IIS-15W5).
  - Equal to 70 Watt Incandescent
  - Initial Lumens: 900
  - Color Rendering Index: 82
  - Color Temp: 5000k
  - Color or Hue: Stark White

1

APPROVED
BY
STATE FIRE MARSHAL'S OFFICE
STATE OF MISSISSIPPI
8/6/07

Unified Interior Standards - MS Cottage Model

- The placement of the HVAC ductless unit shall be dimensioned on the manufacturer's submittals and location to be verified/approved by the State. The installation shall follow manufacturer's recommended specifications.

BEDROOM

- Carpet color and texture shall be selected from Carpet Manufacturer's standard color and texture series.
- A Nickel-colored metal transition strip shall be installed centerline, under the door (as closed in frame).
- W/D hook ups shall have a cover painted white enamel, semi-gloss metal that is easily removed by the home owner.
- W/D Space shall have the same finished flooring as the bathroom.
- Attic Access Panel (9/16" sanded plywood) shall be painted latex semi gloss all faces and sides. 1x4 nominal wood casing to match. Color to be selected (to match ceiling color). Attic access panel shall be flat trim overlapping the opening to create an air gap as shown below...

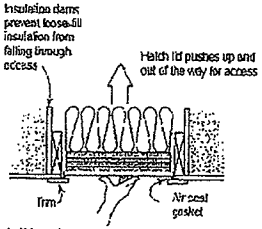

- Electrical panel box shall be painted to match wall color adjacent, (paint as required for metal pre-finished baked on) latex enamel.
- Light fixture, per schedule.
- All hardware shall have a brushed stainless, aluminum, or nickel, (metal) finish. Brushed stainless wire pulls for drawer and cabinet doors.
- Wire Shelf with clothes hanger rod shall be included in the closet.
- Dresser drawers, doors, and panels shall be solid wood, flat panel.
- Door track shall have a brushed aluminum or nickel in color metal finish.

THE DETAILS DESCRIBED IN THIS SECTION ARE GENERAL IN THEIR DESCRIPTION. THE MANUF'R MAY SUBSTITUTE OTHER MATERIALS AND FINISHES PROVIDED THE SUBSTITUTE IS LISTED IN THE "MS" SECTION OF THE DAPIA.

2

APPROVED BY
SEP - 5 2007
NTA INC

CHRIS D. WALDREP
REGISTERED PROFESSIONAL ENGINEER
18328
STATE OF MISSISSIPPI
7/16/07
P.E. STAMP

CAVALIER HOME BUILDERS

REVISIONS:	SCALE:	APPROVED BY:	STATE OF MISSISSIPPI	TITLE:	MODEL NO:
---	NTS = 1'-0"	------	MISSISSIPPI EMERGENCY MANAGEMENT AGENCY	GENERAL INTERIOR SPECIFICATIONS	09-B1014
	DATE: 7/16/07	DRAWN BY: ------		HOUSE SIZE: 16 x 70 --- 3BR 1BATH	DRAWING NO: 33 of 51

BATHROOM

- Bathroom flooring and flooring under the W/D area shall be of a color and texture to be selected (By Owner) from manufacturer's standard selection.
- Mirror shall be ground edge, supported by metal clips screwed into solid backing.
- Mirror shall start where the countertop and backsplash terminate (a gap no more than 1/4" maximum shall be allowed) installed with clips.
- Medicine cabinet shall have mirror flush with no bevels or edge treatment, (except smooth safety edge, 'frameless') white in color interior finish with adjustable shelves.
- All Cabinets, cabinet doors, and shelves shall be solid light oak or maple wood smooth, raised/flat panel.
- Tub, shower enclosure, and plumbing fixtures enclosure shall be one piece white in color to match
- Hardware (including curtain rod) shall be brushed metal finish or chrome to match.
- Toilet shall be white in color wood toilet seat to match.
- Sink shall be white in color with lever handle with brushed aluminum or nickel in color metal finish.
- Sink lav set/faucets shall be levers rather than knobs, two pieces (one cold, one hot).
- Bathroom countertop shall be white (in color matching trim), rolled edges. What is there now
- Bathroom walls shall be smooth tape and textured, flat finish, wall color to be arranged per the manufacturer after bid award (Bathroom Color)
- Vanity light shall be double or triple *bulb* scones *(sconces)* accepting compact fluorescent light bulbs and shall have a brushed aluminum or nickel metal finish.
- Toilet paper holder and towel bar shall be installed and be brushed aluminum or nickel, metal finish
- Bathroom fan shall be white.

KITCHEN & LIVING ROOM

- Flooring shall arranged with the manufacturer after bid award from manufacturer's standard selection.
- All light fixtures shall have a brushed aluminum or nickel in color, metal finish.
- All Cabinets and cabinet doors shall be solid light oak or maple wood smooth, raised/flat panel, to be arranged with the manufacture after the award
- Countertop shall be of a standard color to be arranged with the manufacturer after bid award, rolled edges.
- Living and Kitchen walls shall be smooth tape and textured, flat finish, wall color to be arranged per the manufacturer after bid award (Living/Kitchen Color)
- Kitchen sink light shall be overhead flush mount; Round Ceiling Fixture with brushed nickel

Unified Interior Standards - MS Cottage Model

shall be noted by the manufacturer and approved by the State and the installation shall follow manufacturer's recommended specifications.

- Kitchen light shall be surface mount and shall have a brushed aluminum or nickel metal finish, single or double fixture and able to receive compact fluorescent light bulbs. Round Ceiling Fixture with brushed nickel metal body and white glass, 14" W x 4.5" H
- Vent hood, range, and refrigerator shall all be white.

APPROVED
BY
STATE FIRE MARSHAL'S OFFICE
STATE OF MISSISSIPPI
DATE: 9/6/07

THE DETAILS DESCRIBED IN THIS SECTION ARE GENERAL IN THEIR DESCRIPTION. THE MANUF'R MAY SUBSTITUTE OTHER MATERIALS AND FINISHES PROVIDED THE SUBSTITUTE IS LISTED IN THE "MS" SECTION OF THE DAPIA.

APPROVED BY

SEP - 5 2007

NTA INC

CHRIS D. WALDREP REGISTERED PROFESSIONAL ENGINEER 16328 STATE OF MISSISSIPPI

7/16/07

P.E. STAMP

CAVALIER HOME BUILDERS

REVISIONS	SCALE	APPROVED BY	STATE OF MISSISSIPPI	TITLE	MODEL NO
----	NTS = 1'-0"	------		GENERAL INTERIOR SPECIFICATIONS	09-B1014
	DATE 7/16/07	DRAWN BY ------	MISSISSIPPI EMERGENCY MANAGEMENT AGENCY	HOUSE SIZE 16 x 70 --- 3BR 1BATH	DRAWING NO 34 of 51

APPROVED
BY
STATE FIRE MARSHAL'S OFFICE
STATE OF MISSISSIPPI
DATE: 9/6/07

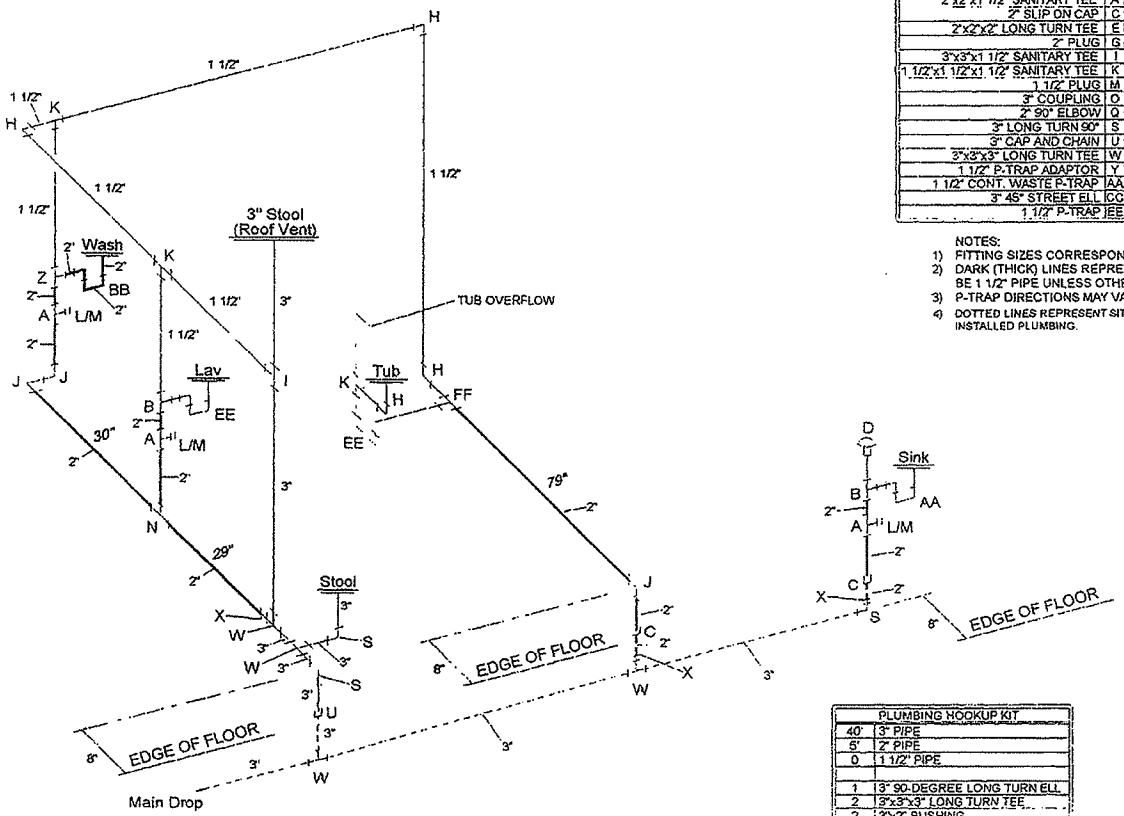

DWV FITTING LEGEND				
2"x2"x1 1/2" SANITARY TEE	A	B	2"x1 1/2"x1 1/2" SANITARY TEE
2" SLIP ON CAP	C	D	1 1/2" AIR ADMITTANCE VALVE
2"x2"x2" LONG TURN TEE	E	F	2" CLEANOUT
2" PLUG	G	H	1 1/2" 90° LONG TURN ELBOW
3"x3"x1 1/2" SANITARY TEE	I	J	2" 90° LONG TURN ELBOW
1 1/2"x1 1/2"x1 1/2" SANITARY TEE	K	L	1 1/2" CLEANOUT
1 1/2" PLUG	M	N	2"x2"x2" LONG TURN TEE
3" COUPLING	O	P	2" COUPLING
2" 90° ELBOW	Q	R	3"x3"x3" SANITARY TEE
3" LONG TURN 90°	S	T	4"x3" HUB FLANGE
3" CAP AND CHAIN	U	V	3"x3"x2" SANITARY TEE
3"x3"x3" LONG TURN TEE	W	X	3"X2" BUSHING
1 1/2" P-TRAP ADAPTOR	Y	Z	2"x1 1/2"x2" SANITARY TEE
1 1/2" CONT. WASTE P-TRAP	AA	BB	2" P-TRAP w/ UNION OR GLUE
3" 45° STREET ELL	CC	DD	1 1/2" 45° STREET ELL
1 1/2" P-TRAP	EE	FF	2" X 1 1/2" X 1 1/2" LONG TURN TEE

NOTES:
1) FITTING SIZES CORRESPOND TO ADJACENT PIPE SIZES.
2) DARK (THICK) LINES REPRESENT 2" PIPE; ALL OTHER TO BE 1 1/2" PIPE UNLESS OTHERWISE NOTED.
3) P-TRAP DIRECTIONS MAY VARY.
4) DOTTED LINES REPRESENT SITE INSTALLED PLUMBING.

NOTES:
1) DOTTED LINES REPRESENT SITE INSTALLED PLUMBING.
2) ALL FITTINGS AND PIPE NECESSARY FOR PROPER CONNECTION OF THE DWV SYSTEM ARE INCLUDED IN THIS KIT. ANY VARIATION FROM THIS DESIGN RESULTING IN A SHORTAGE OF MATERIAL SHALL BE THE INSTALLER'S RESPONSIBILITY.
3) ALL PIPING MUST BE SUPPORTED AT INTERVALS NOT EXCEEDING 4'-0".
4) DRAIN PIPES MUST HAVE A MIN. SLOPE OF 1/4" PER FOOT (1/8" PER FOOT WITH CLEAN-OUT).
5) PIPE LENGTHS ARE FROM CENTER TO CENTER OF FITTINGS.

PLUMBING HOOKUP KIT	
40'	3" PIPE
6'	2" PIPE
0	1 1/2" PIPE
1	3" 90-DEGREE LONG TURN ELL
2	3"x3"x3" LONG TURN TEE
2	3"X2" BUSHING
1	3" COUPLING
2	2" COUPLING

APPROVED BY
SEP - 5 2007
NTA INC

CHRIS D. WALDRED
REGISTERED PROFESSIONAL
ENGINEER
16328
STATE OF MISSISSIPPI
7/16/07
P.E. STAMP

CAVALIER
HOME
BUILDERS

REVISIONS:	SCALE:	APPROVED BY:		TITLE:	MODEL NO:
----	NTS	----	**STATE OF MISSISSIPPI**	DRAIN WASTE VENT SCHEMATIC	09-B1014
	DATE: 7/16/07	DRAWN BY: ----	MISSISSIPPI EMERGENCY MANAGEMENT AGENCY	HOUSE SIZE: 16 x 70 --- 3BR 1BATH	DRAWING NO: 35 of 51

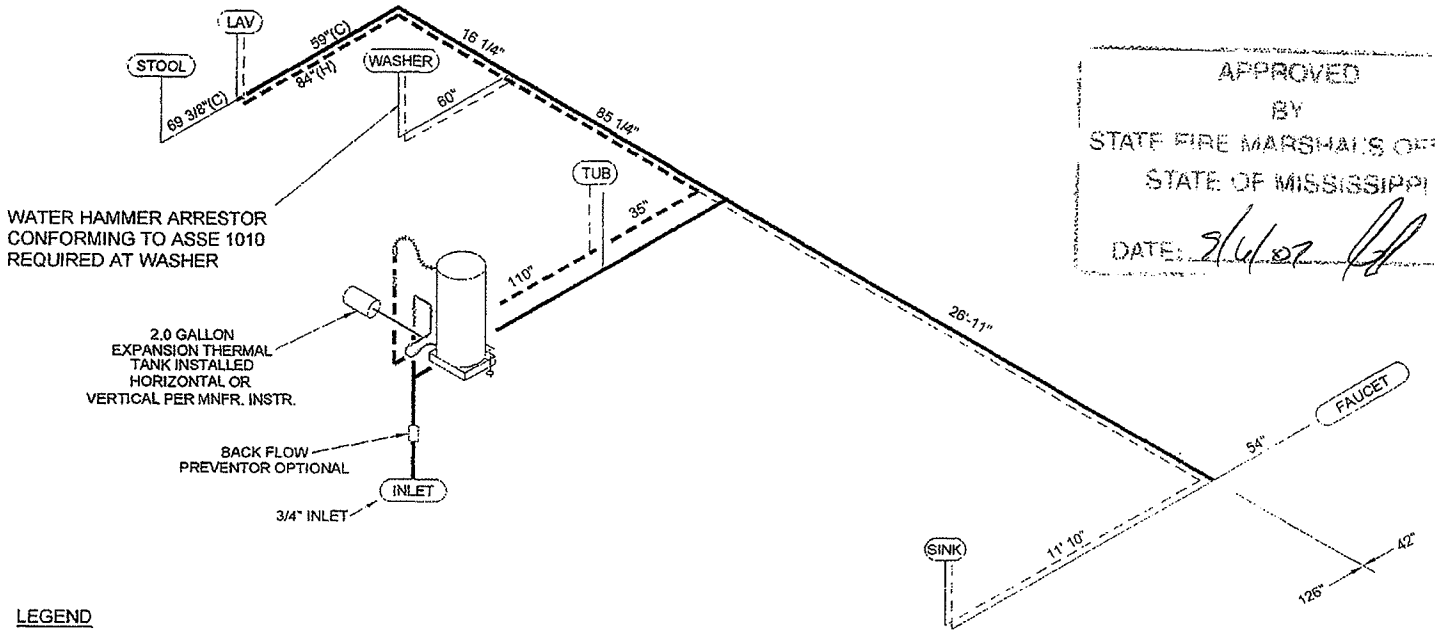

APPROVED
BY
STATE FIRE MARSHAL'S OFFICE
STATE OF MISSISSIPPI
DATE: 9/6/07

LEGEND

- 1/2" LINE (COLD)
- 1/2" LINE (HOT)
- 3/4" LINE (COLD)
- 3/4" LINE (HOT)
- CUT OFF VALVE LOCATION

NOTES:

1) FITTING SIZES TO CORRESPOND TO ADJACENT PIPE SIZES.
2) COPPER, CPVC, OR OTHER APPROVED OR LISTED MATERIAL MAY BE USED.
3) ALL SIZING OF PIPE + OR -, MUST MEET OR EXCEED ANY APPLICABLE CODES.
4) PEX LINES MUST BE SUPPORTED 48" OC MAXIMUM.
5) PIPE LENGHTS TO FIXTURES INCLUDES PIPE FOR RISERS.

APPROVED BY

SEP - 5 2007

NTA INC

CHRIS D. WALDREP
REGISTERED PROFESSIONAL
ENGINEER
16328
STATE OF MISSISSIPPI

8/16/07

P.E. STAMP

CAVALIER
HOME
BUILDERS

REVISIONS:	SCALE: NTS	APPROVED BY:	**STATE OF MISSISSIPPI**	TITLE: WATER SUPPLY LINE SCHEMATIC	MODEL NO: 09-B1014
	DATE: 8/16/07	DRAWN BY:	MISSISSIPPI EMERGENCY MANAGEMENT AGENCY	HOUSE SIZE: 16 x 70 — 3BR 1BATH	DRAWING NO: 36 of 51

APPROVED
BY
STATE FIRE MARSHAL'S OFFICE
STATE OF MISSISSIPPI
DATE: 9/6/07

48" MAX. SPAN

HEADER SECTION

SCALE: NONE

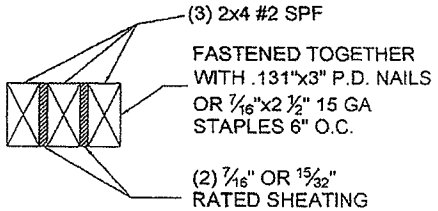

48" MAX. SPAN

ALT. HEADER SECTION

SCALE: NONE

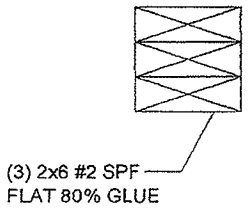

SHEARWALL TIE DOWN DETAIL

SCALE: NONE

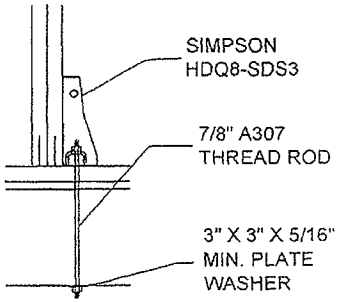

SIDEWALL FRAMING NOTES:

1. FASTEN WALL TO FLOOR WITH #8 X 3" SCREWS OR .131" X 3" NAILS (3) PER BAY.
2. FASTEN 1/2" DRYWALL TO STUDS WITH #6 X 1 1/4" DRYWALL SCREWS OR 1 5/8" DRYWALL NAILS 8" O.C. EDGES AND #6 X 1 1/4" DRYWALL SCREWS 16" O.C. FIELD WITH 80% ADHESIVE.
3. 1/2" DRYWALL INSTALLED HORIZONTAL ON ALL WALLS GREATER THAN 48".
4. FASTEN TOP AND BOTTOM PLATES TO STUDS WITH (5) .131" X 3" PD NAILS OR (7) 7/16" X 2 1/2"-15 GA. STAPLES.
5. FASTEN DOUBLE TOP PLATES WITH .131" X 3" PD NAILS OR 7/16" X 2 1/2"-15 GA. STAPLES 6" O.C.
6. HEADERS AND SILLS FASTEN TO STUD WITH (5) .131" X 3" PD NAILS OR (7) 7/16" X 2 1/2"-15 GA. STAPLES EACH END EACH MEMBER.
7. MULTIPLE STUDS FASTEN TOGETHER WITH .131" X 3" PD NAILS OR 7/16" X 2 1/2"-15 GA. STAPLES 6" O.C.
8. WALL TO WALLS FASTENED TOGETHER WITH .131" X 3" PD NAILS OR #8 X 3" SCREWS 10" O.C. PLUS (3) 9MM X 3" LAGS (ONE LAG 1" FROM TOP AND BOTTOM OF STUD AND ONE LAG AT MIDPOINT).
9. STRAP EACH STUD TO RIM JOIST AT DOORS AND WINDOWS (SIDEWALL) WITH 1 1/2" X 12" X 26 GA. STRAP FASTENED WITH (8) 7/16" X 1" PEN. X 15 GA. STAPLES OR (8) .120" X 1 1/2" PD NAILS EACH END AND AT 2X6 PORCH HEADER AS SHOWN.
10. SPLICE BOTTOM PLATE AND LOWER TOP PLATE 3"X5"X20 GA. CONNECTOR PLATE EACH SIDE OR EQUAL.
11. FASTEN ENDWALL TO SIDEWALL TOP PLATES WITH 3"X6" X .035 PLATE WITH (6) .131" X 3" PD NAILS EACH SIDE OR EQUAL.
12. NOTCHING IN STUDS SHALL BE PER IRC R602.6 OR HUD 3280.305g.
13. TOP PLATE SPLICES ARE TO BE STAGGERED 48" MIN.

APPROVED BY
SEP - 5 2007
NTA INC

CHRIS D. WALDRED
REGISTERED PROFESSIONAL ENGINEER
16328
STATE OF MISSISSIPPI
7/16/07
P.E. STAMP

CAVALIER HOME BUILDERS

REVISIONS:	SCALE:	APPROVED BY:	STATE OF MISSISSIPPI	TITLE:	MODEL NO.
---	NTS = 1'-0"	------		WALL FRAMING NOTES	09-B1014
	DATE: 7/16/07	DRAWN BY: ---	MISSISSIPPI EMERGENCY MANAGEMENT AGENCY	HOUSE SIZE: 16 x 70 --- 3BR 1BATH	DRAWING NO: 37 of 51

APPROVED
BY
STATE FIRE MARSHAL'S OFFICE
STATE OF MISSISSIPPI
DATE: 9/6/07

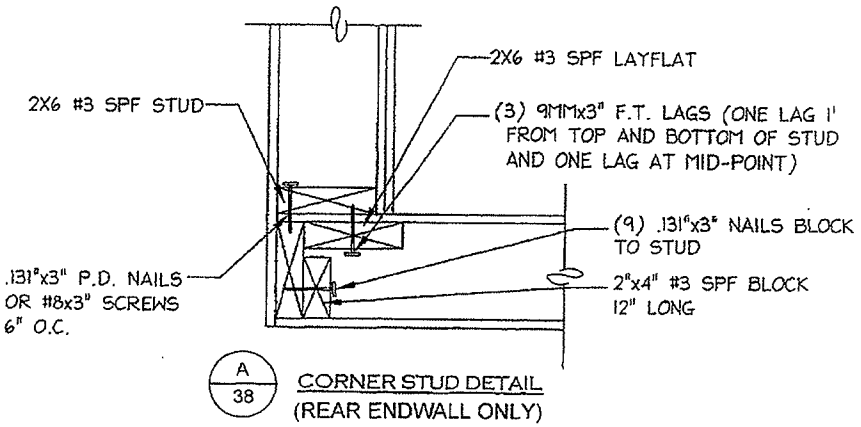

A/38 CORNER STUD DETAIL
(REAR ENDWALL ONLY)

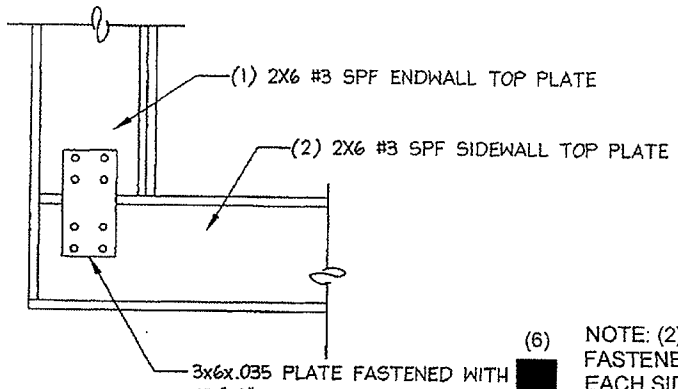

C/38 CORNER TOP PLATE DETAIL

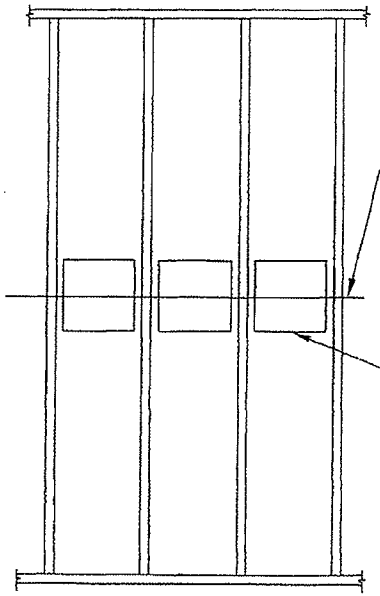

B/38 DRYWALL JOINT REINFORCEMENT DETAIL

NOTE:
OPTIONAL REINFORCEMENT MAY BE USED AT THE APPROVAL OF THE ENGINEER OF RECORD.

(6) NOTE: (2) 1 1/2" X 12"-26 GA. STRAPS FASTENED WITH (7) .120 X 1 1/4" NAILS EACH SIDE MAY BE USED AT WALL CONNECTION INSTEAD OF PLATE.

LUMBER MAY BE #3 OR STUD GRADE SYP

APPROVED BY
SEP - 5 2007
NTA INC

CHRIS D. WALDREP
REGISTERED PROFESSIONAL ENGINEER
16328
STATE OF MISSISSIPPI
7/16/07
P.E. STAMP

CAVALIER HOME BUILDERS

REVISIONS:	SCALE:	APPROVED BY:	STATE OF MISSISSIPPI	TITLE:	
---	NTS = 1'-0"	---	MISSISSIPPI EMERGENCY MANAGEMENT AGENCY	WALL FRAMING DETAILS	09-B1014
	DATE: 7/16/07	DRAWN BY: ---		HOUSE SIZE: 16 x 70 --- 3BR 1BATH	DRAWING NO.: 38 of 51

APPROVED
BY
STATE FIRE MARSHAL'S OFFICE
STATE OF MISSISSIPPI
DATE: 9/6/07

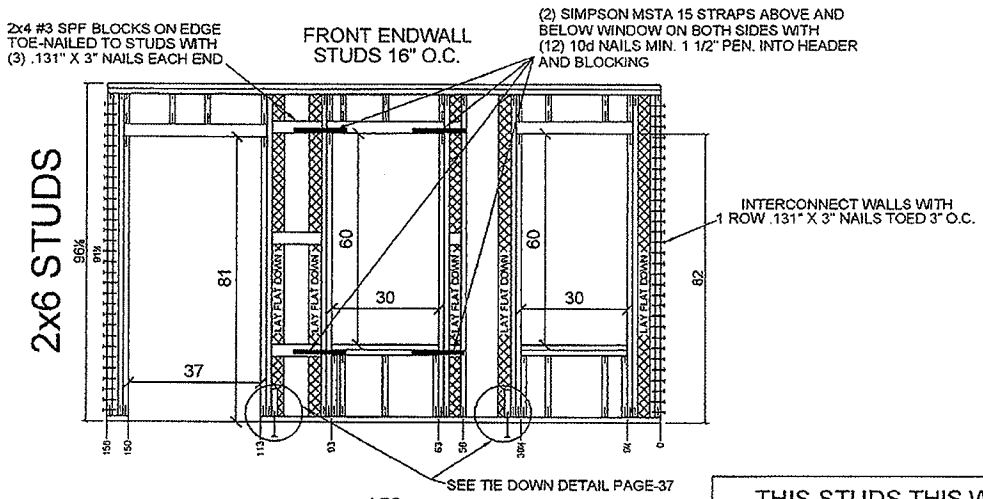

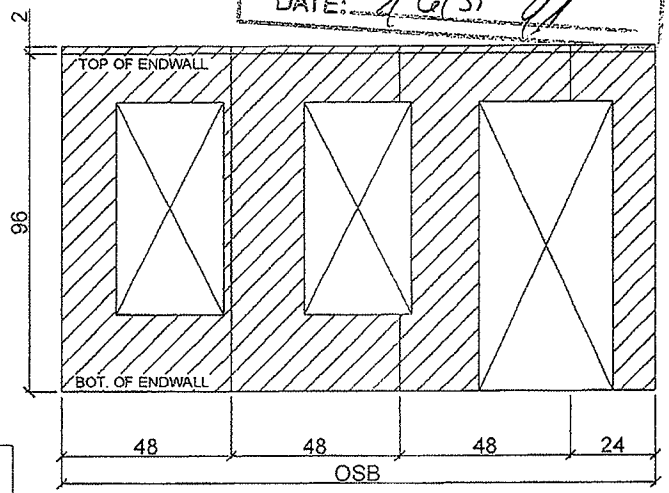

EXTERIOR VIEW

THIS STUDS THIS WALL ARE REQ'D TO BE SYP

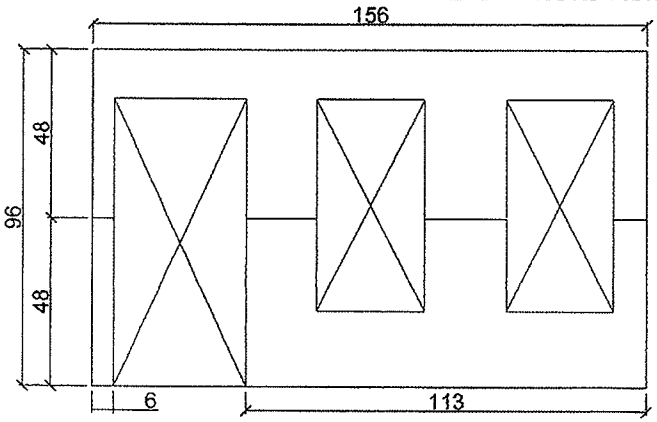

INTERIOR VIEW

WALL FRAMING NOTES

1. FASTEN WALL TO FLOOR AND WALL TO CEILING WITH (6) #8 x 3" SCREWS PER BAY (3" O.C.).
2. FASTEN 1/2" DRYWALL TO STUDS WITH #6 x 1-1/4" DRYWALL SCREWS OR 1-5/8" DRYWALL NAILS 8" O.C. EDGES, 16" O.C. FIELD WITH 80% ADHESIVE.
3. FASTEN TOP AND BOTTOM PLATES TO STUDS WITH (3) 0.131" x 3" P.D. NAILS OR (4) 7/16" x 2-1/2 x 15 GAUGE STAPLES.
4. HEADERS FASTEN TO STUDS WITH (5) 0.131" x 3" P.D. NAILS OR (7) 7/16" x 2-1/2 x 15 GAUGE STAPLES EACH AND EACH MEMBER.
5. WALL TO WALLS FASTENED TOGETHER WITH .131" x 3" P.D. NAILS TOED.

LUMBER MAY BE #3 OR STUD GRADE SYP

THIS WALL TO HAVE 7/16" APA SHEATHING BEHIND SHEETROCK FASTENED WITH .131" X 3" NAILS 3" O.C. EDGE, 6" O.C. FIELD

619 PLF

APPROVED BY
SEP - 6 2007
NTA INC

CHRIS D. WALDREP
REGISTERED PROFESSIONAL ENGINEER
16328
STATE OF MISSISSIPPI
8/16/07
P.E. STAMP

CAVALIER HOME BUILDERS

REVISIONS	SCALE	APPROVED BY	STATE OF MISSISSIPPI	TITLE	MODEL NO
—	NTS = 1'-0"	------		ENDWALL DETAILS – SW1	09-B1014
	DATE 8/16/07	DRAWN BY —	MISSISSIPPI EMERGENCY MANAGEMENT AGENCY	HOUSE SIZE 16 x 70 — 3BR 1BATH	DRAWING NO 39 of 51

2x6 STUDS

REAR ENDWALL
STUDS 16" O.C.

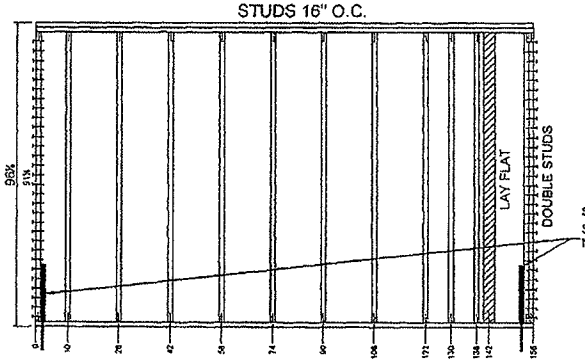

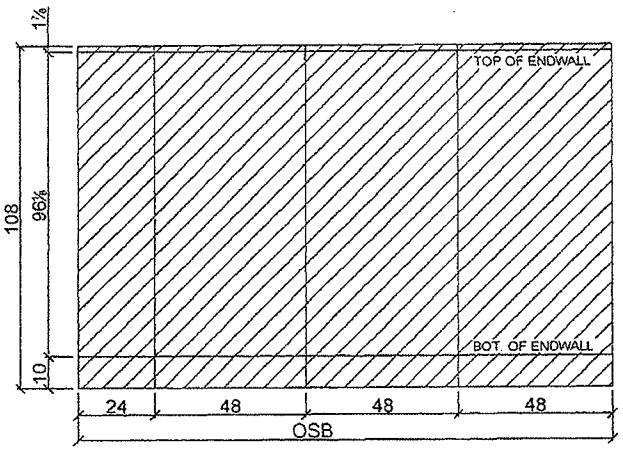

EXTERIOR VIEW

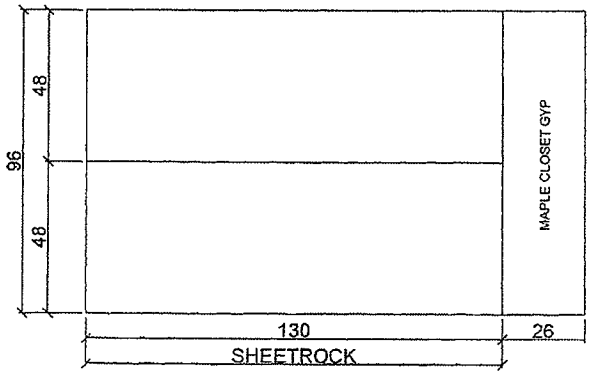

INTERIOR VIEW

WALL FRAMING NOTES

1. FASTEN WALL TO FLOOR AND WALL TO CEILING WITH (6) #8 x 3" SCREWS PER BAY (3" O.C.).
2. FASTEN 1/2" DRYWALL TO STUDS WITH #6 x 1-1/4" DRYWALL SCREWS OR 1-5/8" DRYWALL NAILS 8" O.C. EDGES, 16" O.C. FIELD WITH 80% ADHESIVE.
3. FASTEN TOP AND BOTTOM PLATES TO STUDS WITH (3) 0.131" x 3" P.D. NAILS OR (4) 7/16" x 2-1/2 x 15 GAUGE STAPLES.
4. HEADERS FASTEN TO STUDS WITH (5) 0.131" x 3" P.D. NAILS OR (7) 7/16" x 2-1/2 x 15 GAUGE STAPLES EACH AND EACH MEMBER.
5. WALL TO WALLS FASTENED TOGETHER WITH .131" x 3" P.D. NAILS TOED.

LUMBER MAY BE #3 OR STUD GRADE SYP

APPROVED
BY
STATE FIRE MARSHAL'S OFFICE
STATE OF MISSISSIPPI
DATE: 8/6/07

THIS WALL TO HAVE 7/16" APA SHEATHING BEHIND SHEETROCK FASTENED WITH 7/16" X 2 1/2"-15 GA. STAPLES 3" O.C. EDGE, 6" O.C. FIELD

280 PLF

APPROVED BY
SEP - 5 2007
NTA INC

CHRIS D. WALDREP
REGISTERED PROFESSIONAL
ENGINEER
16328
STATE OF MISSISSIPPI
7/16/07
P.E. STAMP

CAVALIER
HOME
BUILDERS

REVISIONS:	SCALE:	APPROVED BY:		TITLE:	MODEL NO:
---	NTS = 1'-0"	---	**STATE OF MISSISSIPPI**	ENDWALL DETAILS – SW13	09-B1014
	DATE: 7/16/07	DRAWN BY: —	MISSISSIPPI EMERGENCY MANAGEMENT AGENCY	HOUSE SIZE: 16 x 70 --- 3BR 1BATH	DRAWING NO: 40 of 51

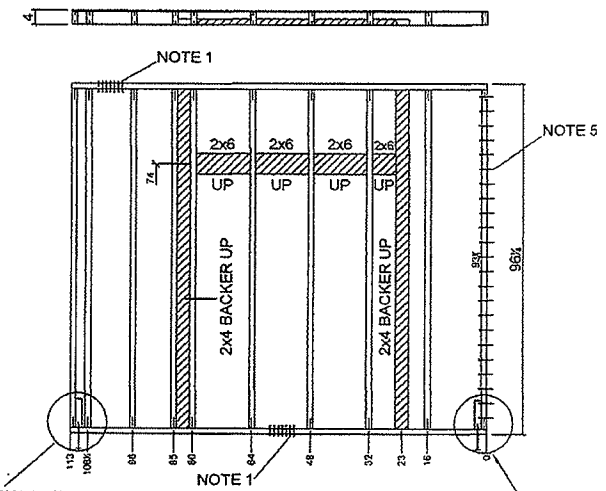

THIS STUDS THIS WALL ARE REQ'D TO BE SYP

APPROVED
BY
STATE FIRE MARSHAL'S OFFICE
STATE OF MISSISSIPPI
DATE: 9/6/07

WALL FRAMING NOTES

1. FASTEN WALL TO FLOOR AND WALL TO CEILING WITH (7) #8 x 3" SCREWS PER BAY (3" O.C.).
2. FASTEN 1/2" DRYWALL TO STUDS WITH #6 x 1-1/4" DRYWALL SCREWS OR 1-5/8" DRYWALL NAILS 8" O.C. EDGES, 16" O.C. FIELD WITH 80% ADHESIVE.
3. FASTEN TOP AND BOTTOM PLATES TO STUDS WITH (3) 0.131" x 3" P.D. NAILS OR (3) 7/16" x 2-1/2 x 15 GAUGE STAPLES.
4. HEADERS FASTEN TO STUDS WITH (3) 0.131" x 3" P.D. NAILS OR (3) 7/16" x 2-1/2 x 15 GAUGE STAPLES EACH AND EACH MEMBER.
5. WALL TO WALLS FASTENED TOGETHER WITH 0.131" x 3" P.D. NAILS OR #8 x 3" SC. 4" O.C. DIRECT OR TOED.

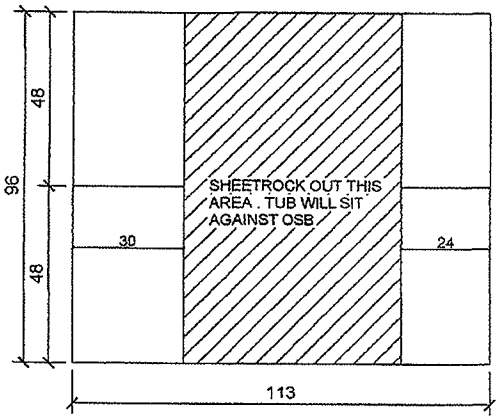

THIS WALL TO HAVE 7/16" APA SHEATHING BEHIND SHEETROCK FASTENED WITH 7/16" X 2 1/2"-15 GA. STAPLES 3" O.C. EDGE, 6" O.C. FIELD

785 PLF

LUMBER MAY BE #3 OR STUD GRADE SYP

APPROVED BY
SEP - 5 2007
NTA INC

CHRIS D. WALDREP
REGISTERED PROFESSIONAL ENGINEER
16328
STATE OF MISSISSIPPI
7/16/07
P.E. STAMP

CAVALIER HOME BUILDERS

REVISIONS	SCALE	APPROVED BY	STATE OF MISSISSIPPI	TITLE	MODEL NO.
---	NTS = 1'-0"	---		INTERIOR SHEARWALL – SW6	09-B1014
	DATE 7/16/07	DRAWN BY —	MISSISSIPPI EMERGENCY MANAGEMENT AGENCY	HOUSE SIZE 16 x 70 --- 3BR 1BATH	DRAWING NO 41 of 51

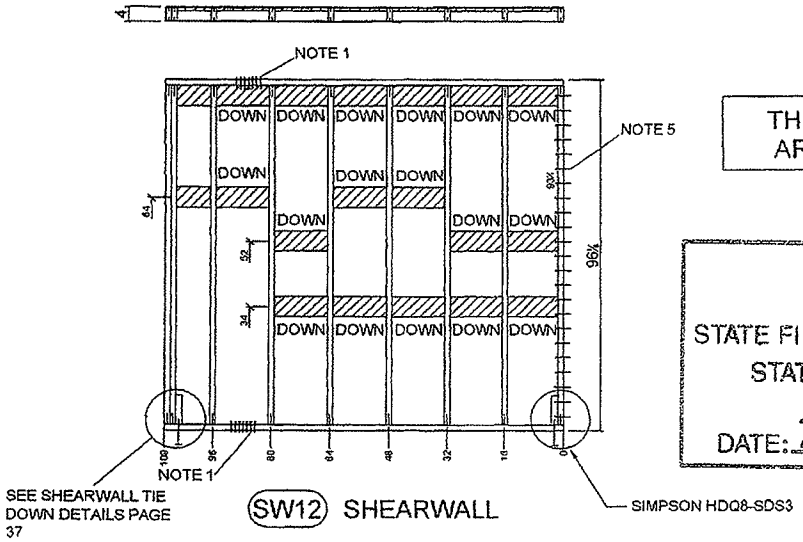

THIS STUDS THIS WALL ARE REQ'D TO BE SYP

APPROVED
BY
STATE FIRE MARSHAL'S OFFICE
STATE OF MISSISSIPPI
DATE: 9/6/07

WALL FRAMING NOTES

1. FASTEN WALL TO FLOOR AND WALL TO CEILING WITH (6) #8 x 3" SCREWS PER BAY (3" O.C.).
2. FASTEN 1/2" DRYWALL TO STUDS WITH #6 x 1-1/4" DRYWALL SCREWS OR 1-5/8" DRYWALL NAILS 8" O.C. EDGES, 16" O.C. FIELD WITH 80% ADHESIVE.
3. FASTEN TOP AND BOTTOM PLATES TO STUDS WITH (3) 0.131" x 3" P.D. NAILS OR (3) 7/16" x 2-1/2 x 15 GAUGE STAPLES.
4. HEADERS FASTEN TO STUDS WITH (3) 0.131" x 3" P.D. NAILS OR (3) 7/16" x 2-1/2 x 15 GAUGE STAPLES EACH AND EACH MEMBER.
5. WALL TO WALLS FASTENED TOGETHER WITH 0.131" x 3" P.D. NAILS OR #8 x 3" SC. 4" O.C. DIRECT OR TOED.

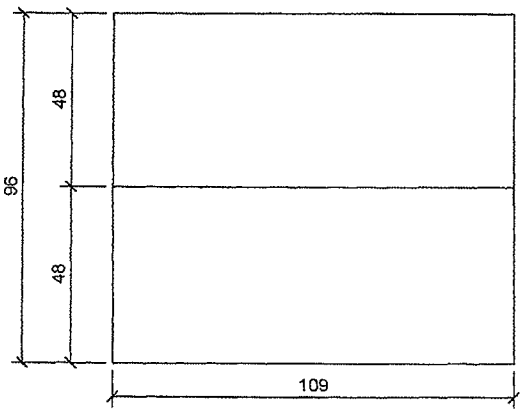

THIS WALL TO HAVE 7/16" APA SHEATHING BEHIND SHEETROCK FASTENED WITH 7/16" X 2 1/2"-15 GA. STAPLES 3" O.C. EDGE, 6" O.C. FIELD

737 PLF

LUMBER MAY BE #3 OR STUD GRADE SYP

APPROVED BY

SEP - 5 2007

NTA INC

CHRIS D. WALDREP REGISTERED PROFESSIONAL ENGINEER 16328 STATE OF MISSISSIPPI

7/16/07

P.E. STAMP

CAVALIER HOME BUILDERS

REVISIONS	SCALE	APPROVED BY		TITLE	MODEL NO
---	NTS = 1'-0"	---	**STATE OF MISSISSIPPI**	INTERIOR SHEARWALL – SW12	09-B1014
	DATE 7/16/07	DRAWN BY ---	MISSISSIPPI EMERGENCY MANAGEMENT AGENCY	HOUSE SIZE 16 x 70 — 3BR 1BATH	DRAWING NO 42 of 51

APPROVED
BY
STATE FIRE MARSHAL'S OFFICE
STATE OF MISSISSIPPI
DATE: 9/6/07

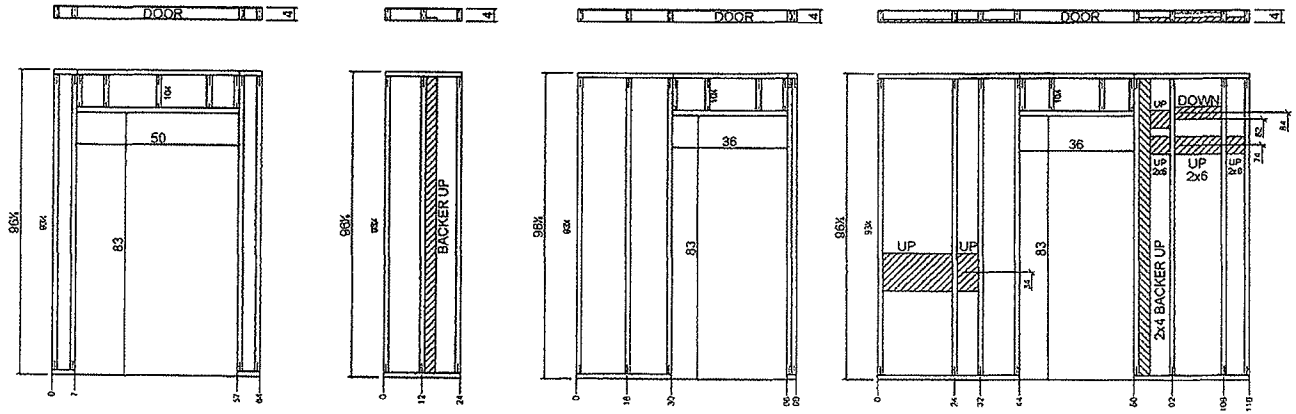

WALL FRAMING NOTES

1. ALL INTERIOR PARTITIONS ARE 2 x 4 #3 SPF AT 16" O.C. UNLESS OTHERWISE NOTED.
2. FASTEN TOP AND BOTTOM PLATES TO STUDS AND HEADER WITH (3) 0.131" x 3" P.D. NAILS OR (3) 7/16" x 2-1/2 x 15 GAUGE STAPLES.
3. WALL TO FLOOR, TO WALL AND TO CEILING FASTEN WITH #8 x 3" SC. 16" O.C. UNLESS OTHERWISE NOTED.
4. INTERIOR FINISH 1/2" GYPSUM FASTENED TO STUDS WITH #6 x 1 1/4" DRYWALL SCREWS OR 1-5/8" DRYWALL NAILS AT 8" O.C. EDGES #6 x 1-1/4" DRYWALL SCREWS 16" O.C. FIELD WITH 80% ADHESIVE.

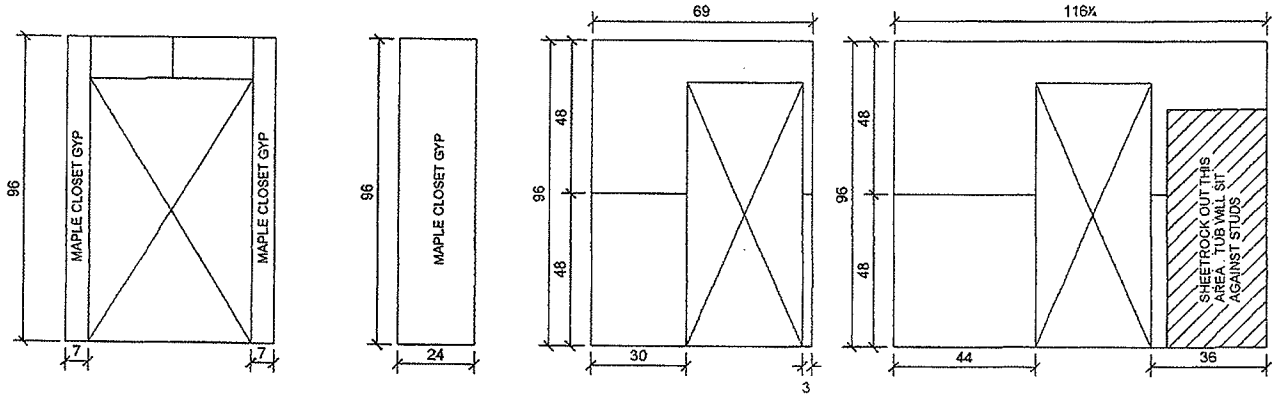

APPROVED BY

SEP - 6 2007

NTA INC

CHRIS D. WALDREP
REGISTERED PROFESSIONAL
ENGINEER
16328
STATE OF MISSISSIPPI

7/16/07

P.E. STAMP

CAVALIER
HOME
BUILDERS

REVISIONS	SCALE	APPROVED BY	STATE OF MISSISSIPPI	TITLE	MODEL NO.
----	NTS = 1'-0"	----	MISSISSIPPI EMERGENCY MANAGEMENT AGENCY	P-WALL DETAILS	09-B1014
	DATE 7/16/07	DRAWN BY —		HOUSE SIZE 16 x 70 --- 3BR 1BATH	DRAWING NO 43 of 51

APPROVED
BY
STATE FIRE MARSHAL'S OFFICE
STATE OF MISSISSIPPI
DATE: 9/6/07

7/16" X 48" OSB BACKER

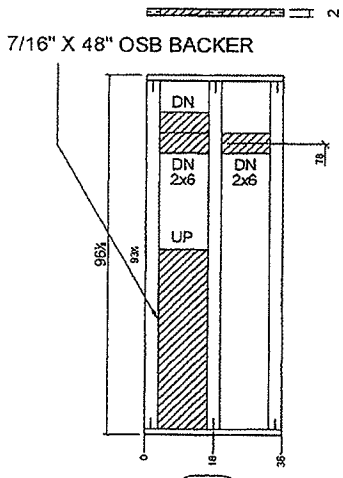

W7

(STUDS TURNED FLAT)

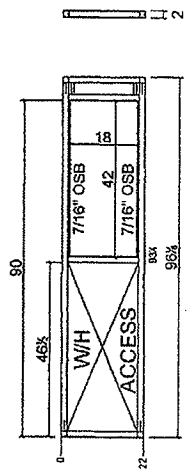

W8

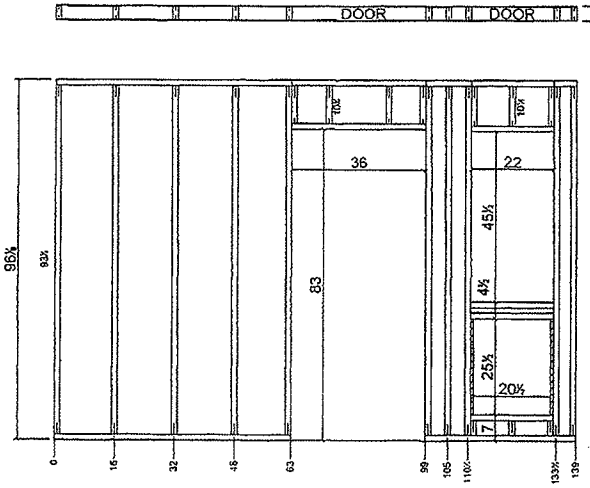

W9

WALL FRAMING NOTES

1. ALL INTERIOR PARTITIONS ARE 2 x 4 #3 SPF AT 16" O.C. UNLESS OTHERWISE NOTED.
2. FASTEN TOP AND BOTTOM PLATES TO STUDS AND HEADER WITH (3) 0.131" x 3" P.D. NAILS OR (3) 7/16" x 2-1/2 x 15 GAUGE STAPLES.
3. WALL TO FLOOR, TO WALL AND TO CEILING FASTEN WITH #8 x 3" SC. 16" O.C. UNLESS OTHERWISE NOTED.
4. INTERIOR FINISH 1/2" GYPSUM FASTENED TO STUDS WITH #6 x 1 1/4" DRYWALL SCREWS OR 1-5/8" DRYWALL NAILS AT 8" O.C. EDGES #6 x 1-1/4" DRYWALL SCREWS 16" O.C. FIELD WITH 80 % ADHESIVE.

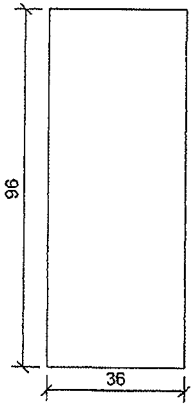

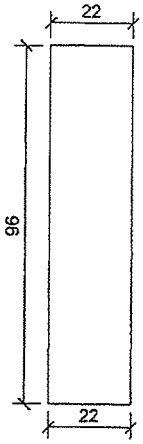

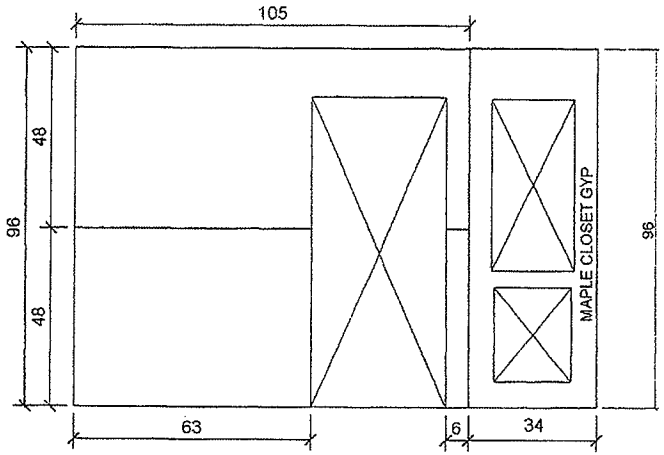

APPROVED BY

SEP - 5 2007

NTA INC

CHRIS D. WALDRED
REGISTERED PROFESSIONAL
ENGINEER
16328
STATE OF MISSISSIPPI

7/16/07

P.E. STAMP

CAVALIER
HOME
BUILDERS

REVISIONS	SCALE:	APPROVED BY:	STATE OF MISSISSIPPI	TITLE:	MODEL NO:
—	NTS = 1'-0"	—	MISSISSIPPI EMERGENCY MANAGEMENT AGENCY	P-WALL DETAILS	09-B1014
	DATE: 7/16/07	DRAWN BY: —		HOUSE SIZE: 16 x 70 — 3BR 1BATH	DRAWING NO.: 44 of 51

APPROVED
BY
STATE FIRE MARSHAL'S OFFICE
STATE OF MISSISSIPPI
DATE: 8/6/07

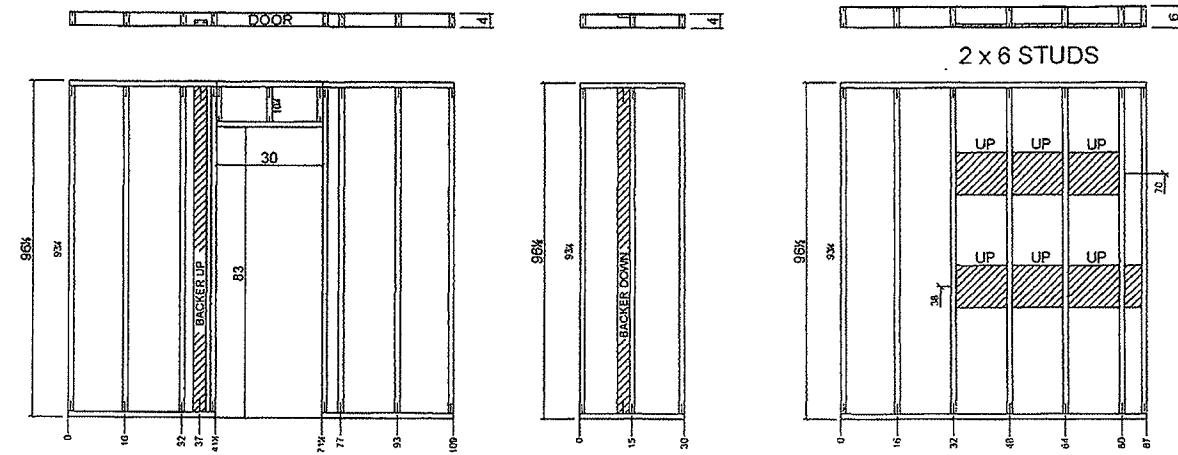

WALL FRAMING NOTES

1. ALL INTERIOR PARTITIONS ARE 2 x 4 #3 SPF AT 16" O.C. UNLESS OTHERWISE NOTED.
2. FASTEN TOP AND BOTTOM PLATES TO STUDS AND HEADER WITH (3) 0.131" x 3" P.D. NAILS OR (3) 7/16" x 2-1/2 x 15 GAUGE STAPLES.
3. WALL TO FLOOR, TO WALL AND TO CEILING FASTEN WITH #8 x 3" SC. 16" O.C. UNLESS OTHERWISE NOTED.
4. INTERIOR FINISH 1/2" GYPSUM FASTENED TO STUDS WITH #6 x 1 1/4" DRYWALL SCREWS OR 1-5/8" DRYWALL NAILS AT 8" O.C. EDGES #6 x 1-1/4" DRYWALL SCREWS 16" O.C. FIELD WITH 80% ADHESIVE.

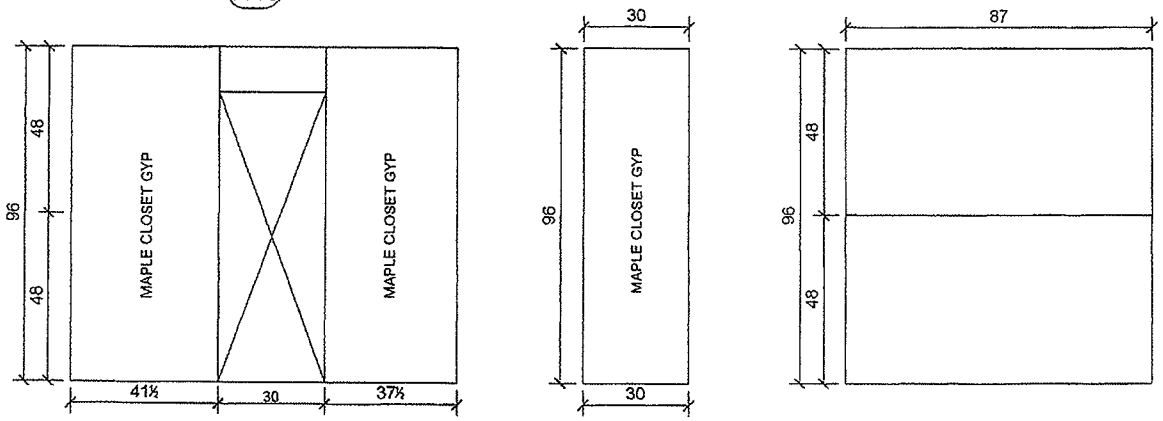

APPROVED BY

SEP - 5 2007

NTA INC

CHRIS D. WALDREP
REGISTERED PROFESSIONAL
ENGINEER
18328
STATE OF MISSISSIPPI

7/16/07

P.E. STAMP

CAVALIER
HOME
BUILDERS

REVISIONS:	SCALE:	APPROVED BY:	STATE OF MISSISSIPPI	TITLE:	MODEL NO:
-----	NTS = 1'-0"	-----		P-WALL DETAILS	09-B1014
	DATE: 7/16/07	DRAWN BY: ---	MISSISSIPPI EMERGENCY MANAGEMENT AGENCY	HOUSE SIZE: 16 x 70 --- 3BR 1BATH	DRAWING NO: 45 of 51

APPROVED
BY
STATE FIRE MARSHALS OFFICE
STATE OF MISSISSIPPI
DATE: 3/6/32

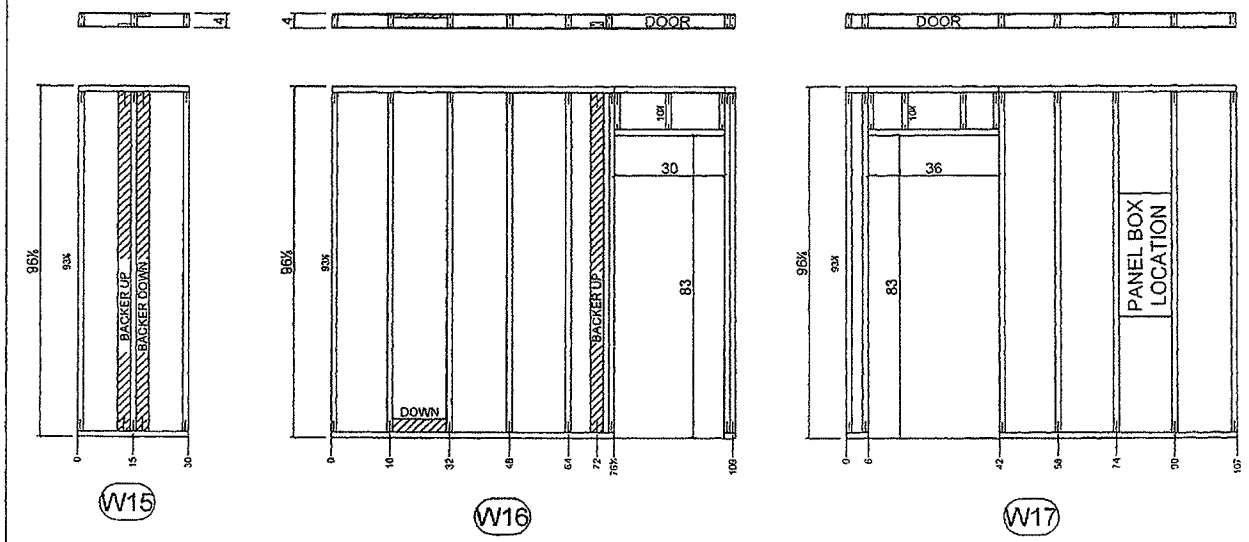

WALL FRAMING NOTES

1. ALL INTERIOR PARTITIONS ARE 2 x 4 #3 SPF AT 16" O.C. UNLESS OTHERWISE NOTED.
2. FASTEN TOP AND BOTTOM PLATES TO STUDS AND HEADER WITH (3) 0.131" x 3" P.D. NAILS OR (3) 7/16" x 2-1/2 x 15 GAUGE STAPLES.
3. WALL TO FLOOR, TO WALL AND TO CEILING FASTEN WITH #8 x 3" SC, 16" O.C. UNLESS OTHERWISE NOTED.
4. INTERIOR FINISH 1/2" GYPSUM FASTENED TO STUDS WITH #6 x 1 1/4" DRYWALL SCREWS OR 1-5/8" DRYWALL NAILS AT 8" O.C. EDGES #6 x 1-1/4" DRYWALL SCREWS 16" O.C. FIELD WITH 80% ADHESIVE.

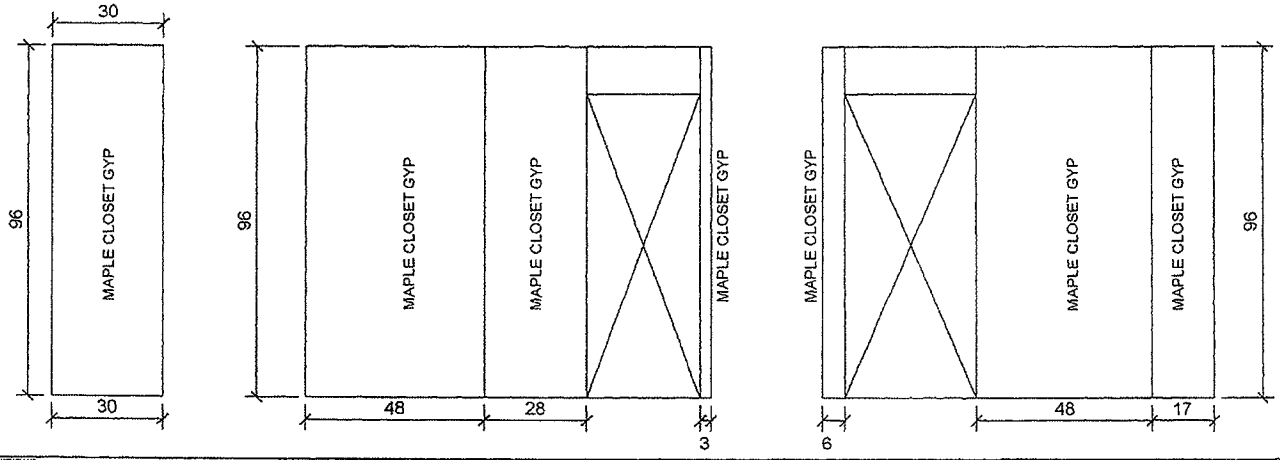

APPROVED BY
SEP - 5 2007
NTA INC

CHRIS D. WALDRED
REGISTERED PROFESSIONAL ENGINEER
16328
STATE OF MISSISSIPPI
7/16/07
P.E. STAMP

CAVALIER HOME BUILDERS

REVISIONS	SCALE:	APPROVED BY:		TITLE:	MODEL NO.
---	NTS = 1'-0"	-----	**STATE OF MISSISSIPPI**	P-WALL DETAILS	09-B1014
	DATE: 7/16/07	DRAWN BY: ---	MISSISSIPPI EMERGENCY MANAGEMENT AGENCY	HOUSE SIZE: 16 x 70 --- 3BR 1BATH	DRAWING NO: 46 of 51

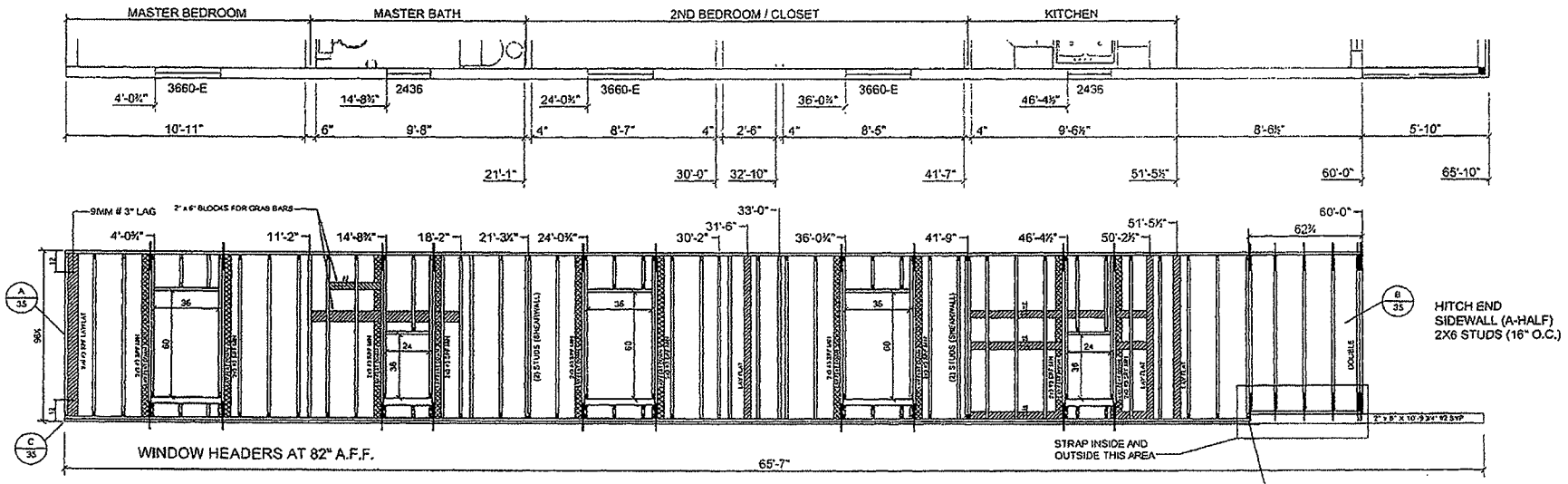

(3) 1-½x12x26 GA. STRAPS FASTENED WITH (8) 7/16x1" PENx15GA. STAPLES EA. SIDE

SIDEWALL FRAMING NOTES:

1. FASTEN WALL TO FLOOR WITH #8 X 3" SCREWS OR .131" X 3" NAILS (3) PER BAY.
2. FASTEN 1/2" DRYWALL TO STUDS WITH #6 X 1 1/4" DRYWALL SCREWS OR 1 5/8" DRYWALL NAILS 8" O.C. EDGES AND #6 X 1 1/4" DRYWALL SCREWS 16" O.C. FIELD WITH 80% ADHESIVE.
3. 1/2" DRYWALL INSTALLED HORIZONTAL ON ALL WALLS GREATER THAN 48".
4. FASTEN TOP AND BOTTOM PLATES TO STUDS WITH (5) .131" X 3" PD NAILS OR (7) 7/16" X 2 1/2"-15 GA. STAPLES.
5. FASTEN DOUBLE TOP PLATES WITH .131" X 3" PD NAILS OR 7/16" X 2 1/2"-15 GA. STAPLES 6" O.C.
6. HEADERS AND SILLS FASTEN TO STUD WITH (5) .131" X 3" PD NAILS OR (7) 7/16" X 2 1/2"-15 GA. STAPLES EACH END EACH MEMBER.
7. MULTIPLE STUDS FASTEN TOGETHER WITH .131" X 3" PD NAILS OR 7/16" X 2 1/2"-15 GA STAPLES 6" O.C.
8. WALL TO WALLS FASTENED TOGETHER WITH .131" X 3" PD NAILS OR #8 X 3" SCREWS 10" O.C. PLUS (3) 9MM X 3" LAGS (ONE LAG 12" FROM TOP AND BOTTOM OF STUD AND ONE LAG AT MIDPOINT).
9. STRAP EACH STUD TO RIM JOIST AT DOORS AND WINDOWS (SIDEWALL) WITH 1 1/2" X 12" X 26 GA. STRAP FASTENED WITH (8) 7/16" X 1" PEN. X 15 GA. STAPLES OR (8) .120" X 1 1/2" PD NAILS EACH END AND AT 2X6 ROOF HEADER AS SHOWN.
10. SPLICE BOTTOM PLATE AND LOWER TOP PLATE WITH 3X6 X .035 CONNECTOR PLATE EACH SIDE OR EQUAL.
11. FASTEN ENDWALL TO SIDEWALL TOP PLATES WITH 3X6 X .035 PLATE WITH (6) .131" X 3" PD NAILS EACH SIDE OR EQUAL.
12. NOTCHING IN STUDS SHALL BE PER IRC R602.6 OR HUD 3280.305g.
13. TOP PLATE SPLICES ARE TO BE STAGGERED 48" MIN.

APPROVED BY
STATE FIRE MARSHAL'S OFFICE
STATE OF MISSISSIPPI
DATE: 9/6/07
BY

APPROVED BY
SEP - 5 2007
NTA INC

CHRIS D. WALDRED
REGISTERED PROFESSIONAL ENGINEER
16328
STATE OF MISSISSIPPI
8/16/07
P.E. STAMP

CAVALIER HOME BUILDERS

REVISIONS:	SCALE:	APPROVED BY:		TITLE:	MODEL NO:
---	NTS = 1'0"	------	**STATE OF MISSISSIPPI**	FRONT SIDEWALL FRAMING	09-B1014
	DATE: 8/16/07	DRAWN BY: ---	MISSISSIPPI EMERGENCY MANAGEMENT AGENCY	HOUSE SIZE: 16 x 70 --- 3BR 1BATH	DRAWING NO: 47 of 51

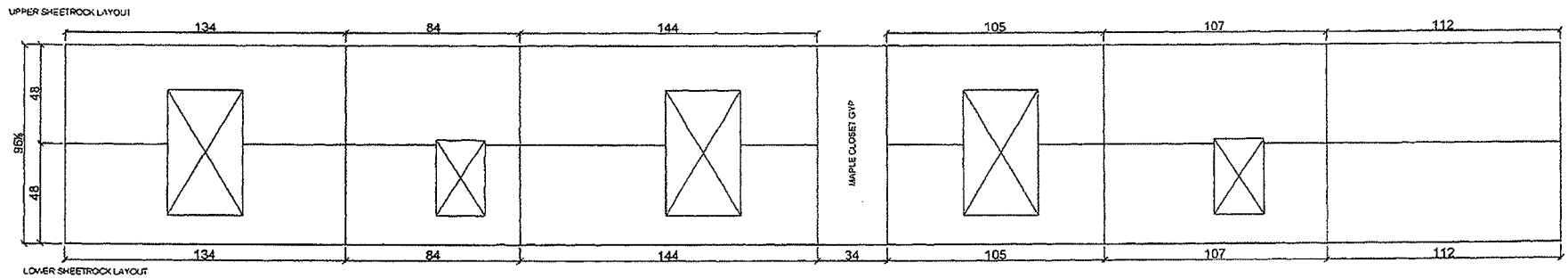

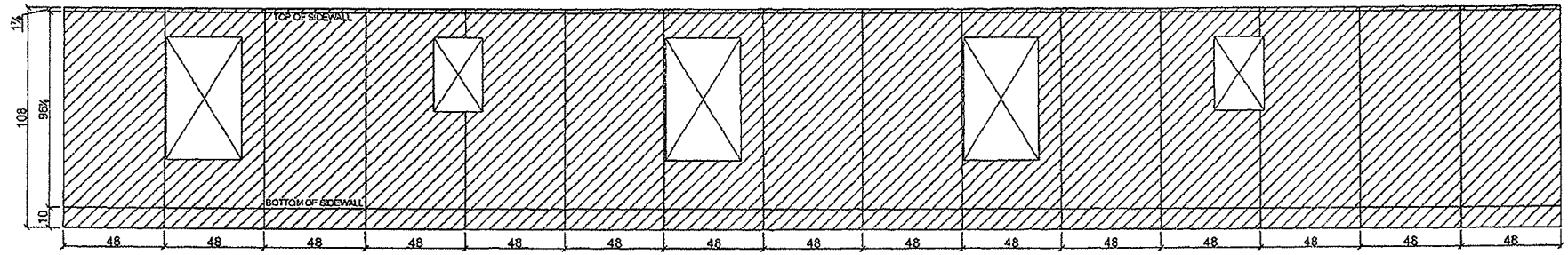

APPROVED
BY
STATE FIRE MARSHAL'S OFFICE
STATE OF MISSISSIPPI
DATE: 9/6/07

APPROVED BY
SEP - 5 2007
NTA INC

CHRIS D. WALDREP
REGISTERED PROFESSIONAL
ENGINEER
16328
STATE OF MISSISSIPPI
7/16/07
P.E. STAMP

CAVALIER
HOME
BUILDERS

REVISIONS:	SCALE:	APPROVED BY:		TITLE:	MODEL NO
---	NTS = 1'0"	------	**STATE OF MISSISSIPPI**	FRONT SIDEWALL SHEATHING	09-B1014
	DATE: 7/16/07	DRAWN BY: ---	MISSISSIPPI EMERGENCY MANAGEMENT AGENCY	HOUSE SIZE: 16 x 70 --- 3BR 1BATH	DRAWING NO: 48 of 51

APPROVED
BY
STATE FIRE MARSHAL'S OFFICE
STATE OF MISSISSIPPI
DATE: 9/6/07

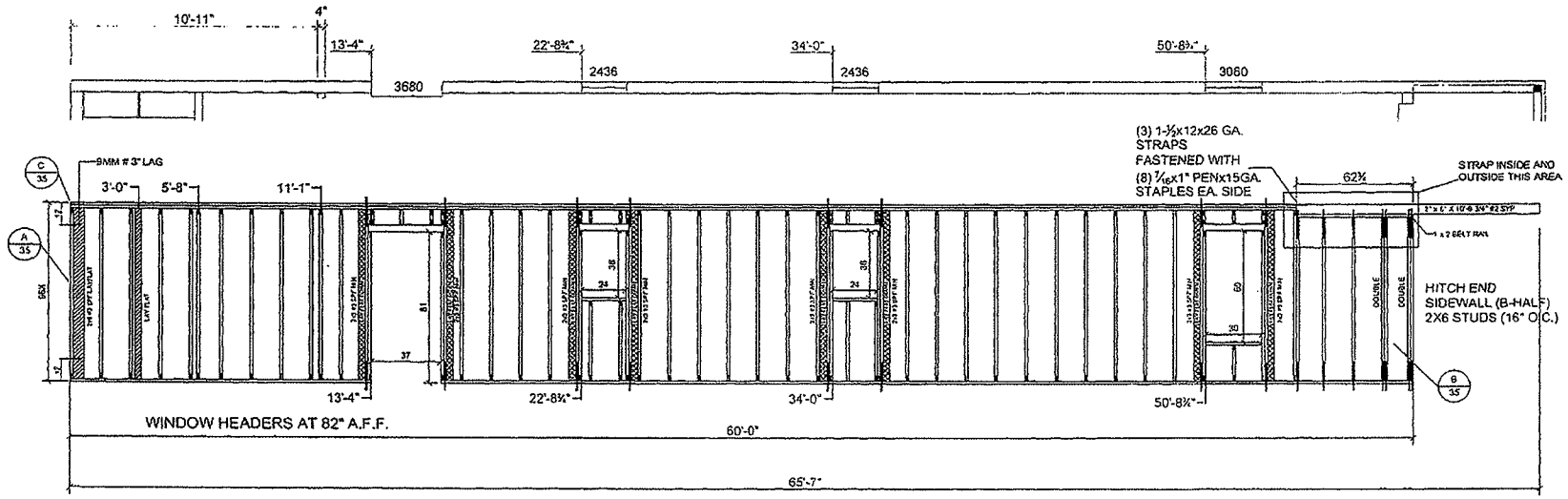

SIDEWALL FRAMING NOTES:
1. FASTEN WALL TO FLOOR WITH #8 X 3" SCREWS OR .131" X 3" NAILS (3) PER BAY.
2. FASTEN 1/2" DRYWALL TO STUDS WITH #6 X 1 1/4" DRYWALL SCREWS OR 1 5/8" DRYWALL NAILS 8" O.C. EDGES AND #6 X 1 1/4" DRYWALL SCREWS 16" O.C. FIELD WITH 80% ADHESIVE.
3. 1/2" DRYWALL INSTALLED HORIZONTAL ON ALL WALLS GREATER THAN 48".
4. FASTEN TOP AND BOTTOM PLATES TO STUDS WITH (5) .131" X 3" PD NAILS OR (7) 7/16" X 2 1/2"-15 GA. STAPLES.
5. FASTEN DOUBLE TOP PLATES WITH .131" X 3" PD NAILS OR 7/16" X 2 1/2"-15 GA. STAPLES 6" O.C.
6. HEADERS AND SILLS FASTEN TO STUD WITH (5) .131" X 3" PD NAILS OR (7) 7/16" X 2 1/2"-15 GA. STAPLES EACH END EACH MEMBER.
7. MULTIPLE STUDS FASTEN TOGETHER WITH .131" X 3" PD NAILS OR 7/16" X 2 1/2"-15 GA. STAPLES 6" O.C.
8. WALL TO WALLS FASTENED TOGETHER WITH .131" X 3" PD NAILS OR #8 X 3" SCREWS 16" O.C. PLUS (3) 9MM X 3" LAGS (ONE LAG 12" FROM TOP AND BOTTOM OF STUD AND ONE LAG AT MIDPOINT)
9. STRAP EACH STUD TO RIM JOIST AT DOORS AND WINDOWS (SIDEWALL) WITH 1 1/2" X 12" X 26 GA. STRAP FASTENED WITH (8) 7/16" X 1" PEN. X 15 GA. STAPLES OR (8) .120" X 1 1/2" PD NAILS EACH END AND AT 2X5 PORCH HEADER AS SHOWN.
10. SPLICE BOTTOM PLATE AND LOWER TOP PLATE 3"X5"X20 GA. CONNECTOR PLATE EACH SIDE OR EQUAL.
11. FASTEN ENDWALL TO SIDEWALL TOP PLATES WITH 3"X6" X .035 PLATE WITH (6) .131" X 3" PD NAILS EACH SIDE OR EQUAL.
12. NOTCHING IN STUDS SHALL BE PER IRC R602.6 OR HUD 3280.305g.
13. TOP PLATE SPLICES ARE TO BE STAGGERED 48" MIN.

APPROVED BY
SEP - 5 2007
NTA INC

CHRIS D. WALDREP
REGISTERED PROFESSIONAL ENGINEER
16328
STATE OF MISSISSIPPI
8/16/07
P.E. STAMP

CAVALIER HOME BUILDERS

REVISIONS:	SCALE:	APPROVED BY:		TITLE:	MODEL NO:
----	NTS = 1'0"	-----	**STATE OF MISSISSIPPI**	REAR SIDEWALL FRAMING	09-B1014
	DATE: 8/16/07	DRAWN BY: ---	MISSISSIPPI EMERGENCY MANAGEMENT AGENCY	HOUSE SIZE: 16 x 70 --- 3BR 1BATH	DRAWING NO: 49 of 51

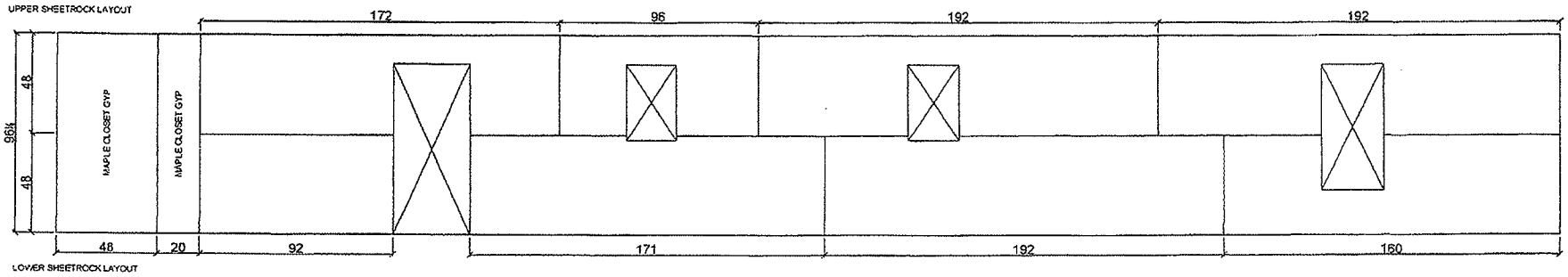

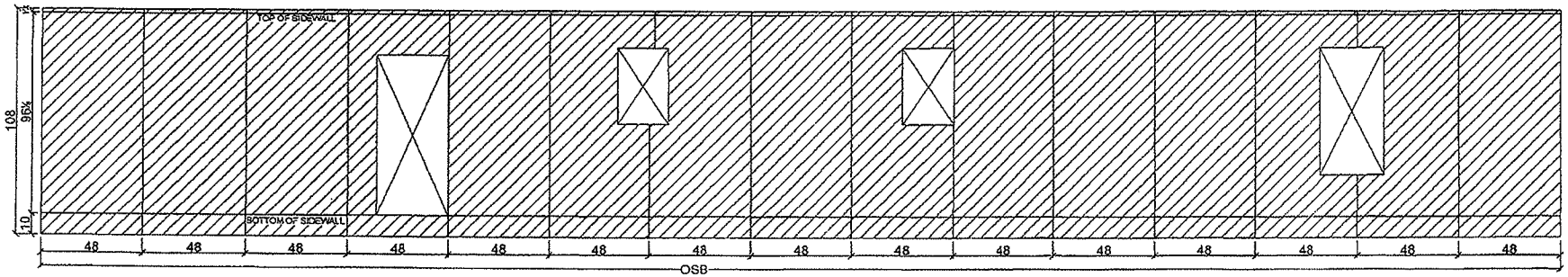

APPROVED
BY
STATE FIRE MARSHAL'S OFFICE
STATE OF MISSISSIPPI
DATE: 9/6/07

APPROVED BY
SEP - 5 2007
NTA INC

CHRIS D. WALDREP
REGISTERED PROFESSIONAL
ENGINEER
16328
STATE OF MISSISSIPPI
7/16/07
P.E. STAMP

CAVALIER
HOME
BUILDERS

REVISIONS	SCALE	APPROVED BY	STATE OF MISSISSIPPI	TITLE	MODEL NO.
----	NTS = 1'0"	------	MISSISSIPPI EMERGENCY MANAGEMENT AGENCY	REAR SIDEWALL SHEATHING	09-B1014
	DATE 7/16/07	DRAWN BY —		HOUSE SIZE 16 x 70 ---- 3BR 1BATH	DRAWING NO. 50 of 51

APPROVED
BY
STATE FIRE MARSHAL'S OFFICE
STATE OF MISSISSIPPI
DATE: 5/6/07

3'x6' MAX. WINDOW SIZE x 54.2 PSF=975.2#
SCREWS: 82x1.6x1" PENT. = 131#
975.2/13=7.4 OR 8 SCREWS.

PERIMETER OF SMALLEST
WINDOW (2+3)x2x12-120"

120/8=15" O.C.

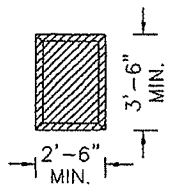

KITCHEN,HALL,BA WINDOW
3-REQ.
1x3 EDGES FRAMING
SQUARE OR 45° CUT
WITH 7/16" OSB COVERING
MINIMUM

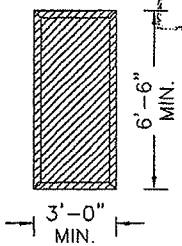

LIVING & DINING ROOM WINDOW
3-REQ.
1x3 EDGES FRAMING
SQUARE OR 45° CUT
WITH 7/16" OSB COVERING
MINIMUM

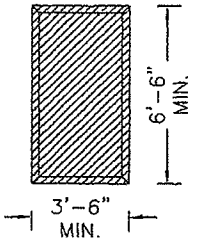

BEDROOM WINDOW
2-REQ.
1x3 EDGES FRAMING
SQUARE OR 45° CUT
WITH 7/16" OSB COVERING
MINIMUM

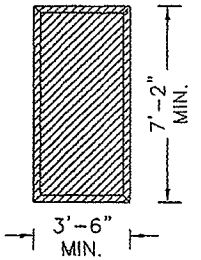

OPTIONAL FRONT DOOR
1-REQ.
1x3 EDGES FRAMING
SQUARE OR 45° CUT
WITH 7/16" OSB COVERING
MINIMUM

HOMES INSTALLED IN WIND-DEBRIS REGIONS MUST HAVE PROVISIONS TO PROTECT THE EXTERIOR GLAZING IN WINDOWS AND DOOR. LOCAL OFFICIAL MUST BE CONSULTED TO DETERMINE IF YOUR SPECIFIC AREA IS LOCATED IN WIND-DEBRIS REGIONS. THE PROTECTION FOR EXTERIOR GLAZING MAY BE PROVIDED.

A 7/16" MINIMUM APA RATE SHEATHING SHALL MUST BE PROVIDED. SHEATHING SHALL BE PRECUT SO THEY SHALL BE ATTACHED TO THE FRAMING SURROUNDING THE OPENING CONTAINING THE PRODUCT WITH THE GLAZED OPENING. PANEL SHALL BE PREDRILLED AS REQUIRED FOR THE FASTENING AND ALL REQUIRED HARDWARE SHALL BE PROVIDED.

NOTE:
PRE-ENGINEERED WINDOW/DOOR PROTECTORS MAY BE INSTALL ON-SITE BY OTHERS. (MUST MEET ALL STATE & LOCAL CODE REQUIREMENTS

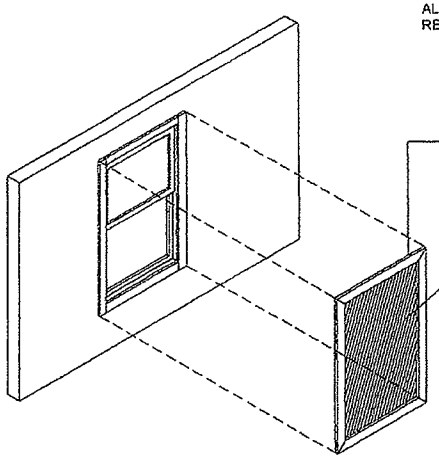

APPROVED BY
SEP - 5 2007

WIND BORNE DEBRIS PROTECTION DETAIL NTA INC

CHRIS D. WALDRUP
REGISTERED PROFESSIONAL ENGINEER
16328
STATE OF MISSISSIPPI
7/16/07
P.E. STAMP

CAVALIER HOME BUILDERS

REVISIONS:	SCALE:	APPROVED BY:	STATE OF MISSISSIPPI	TITLE:	MODEL NO.
---	NTS = 1'-0"	---		WIND BORNE DEBRIS PROTECTION DETAIL	09-B1014
	DATE: 7/16/07	DRAWN BY: ---	MISSISSIPPI EMERGENCY MANAGEMENT AGENCY	HOUSE SIZE: 16 x 70 --- 3BR 1BATH	DRAWING NO: 51 of 51

Duct Design Input

Model)9-B1014 OHD FURN Mfg. cAVALIER HM BDRS Date 8/7/2007 Source

Design Type	Flow Direction	Plenum Connection	Plenum Location	Plenum Width X Plenum Length
Double-section	Up Flow	Furnace	N/A	N/A

Note: all the unspecified dimensions are in inches.

Duct Connection Three

- Furnace
- Main Mixer
  - Mixer
    - Register
    - Mixer
      - Register
      - Register
  - Mixer
    - Register
    - Mixer
      - Register
      - Register

Branches	Flex D	Flex L (ft)	Bend (°)	Tag	Reg HxW
2	16	2	0	Main	N/A
2	9	5.5	0	Mixer	N/A
1	5	3.667	0	REG-3	10 X 6
2	8	6.833	0	Mixer	N/A
1	5	3.167	0	REG-2	10 X 6
1	7	12 5	45	REG-1	10 X 6
2	9	5.5	0	Mixer	N/A
1	5	3.667	0	REG-4	10 X 6
2	8	9.6	0	Mixer	N/A
1	6	3.917	0	REG-5	10 X 6
1	7	7 167	0	REG-6	10 X 6

Duct Design Performance

The refrigerated air cooling supply duct system including registers must be capable of handling at least 300 cfm per 10,000 Btuh with a static pressure no greater than 0.3 inches of water when measured at room temperature-HUD Manufactured Home Construction and Safety Standards, Part 3280.715 (a) (3) (ii)

Performance Calculated at a Static Pressure of 0.3 in. wc.

Air Flow Rate (SCFM)	683	Duct Capacity (Btu/Hr)	22800

Copyright 2002 NORDYNE, Manufacturer of Intertherm and Miller. All rights reserved.

CertiDuct 5.1

APPROVED BY

SEP - 5 2007

NTA INC